ZPA PEČKY, a.s.

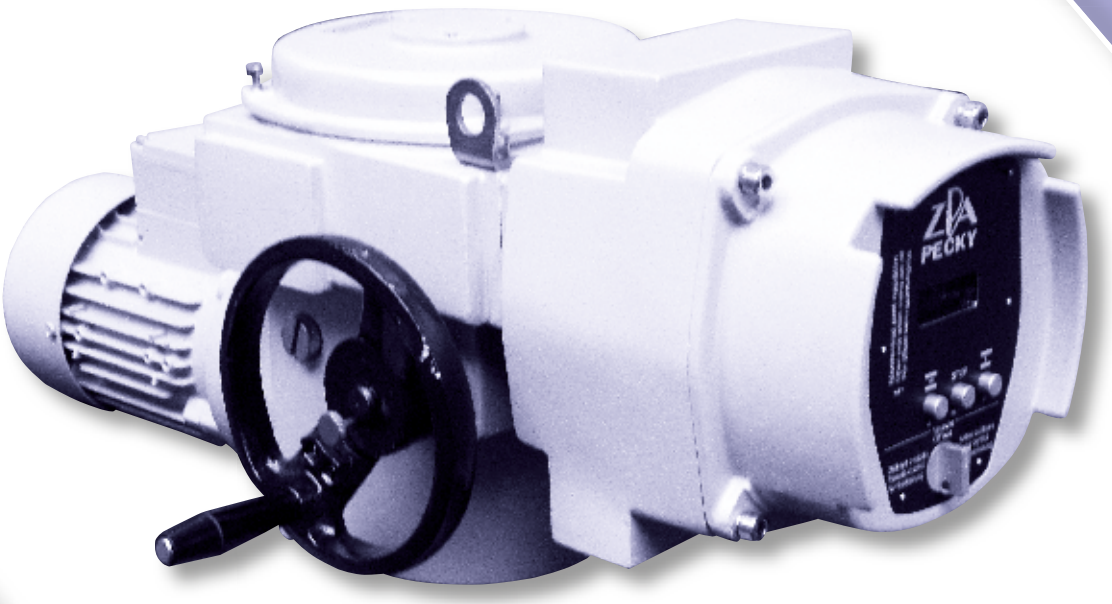

MOUNTING INSTRUCTIONS

Electric Multi-turn Actuators

MODACT MONED, MOPED

Type numbers 52 030 - 52 036

MODACT MONEDJ

Type numbers 52 030 - 52 032

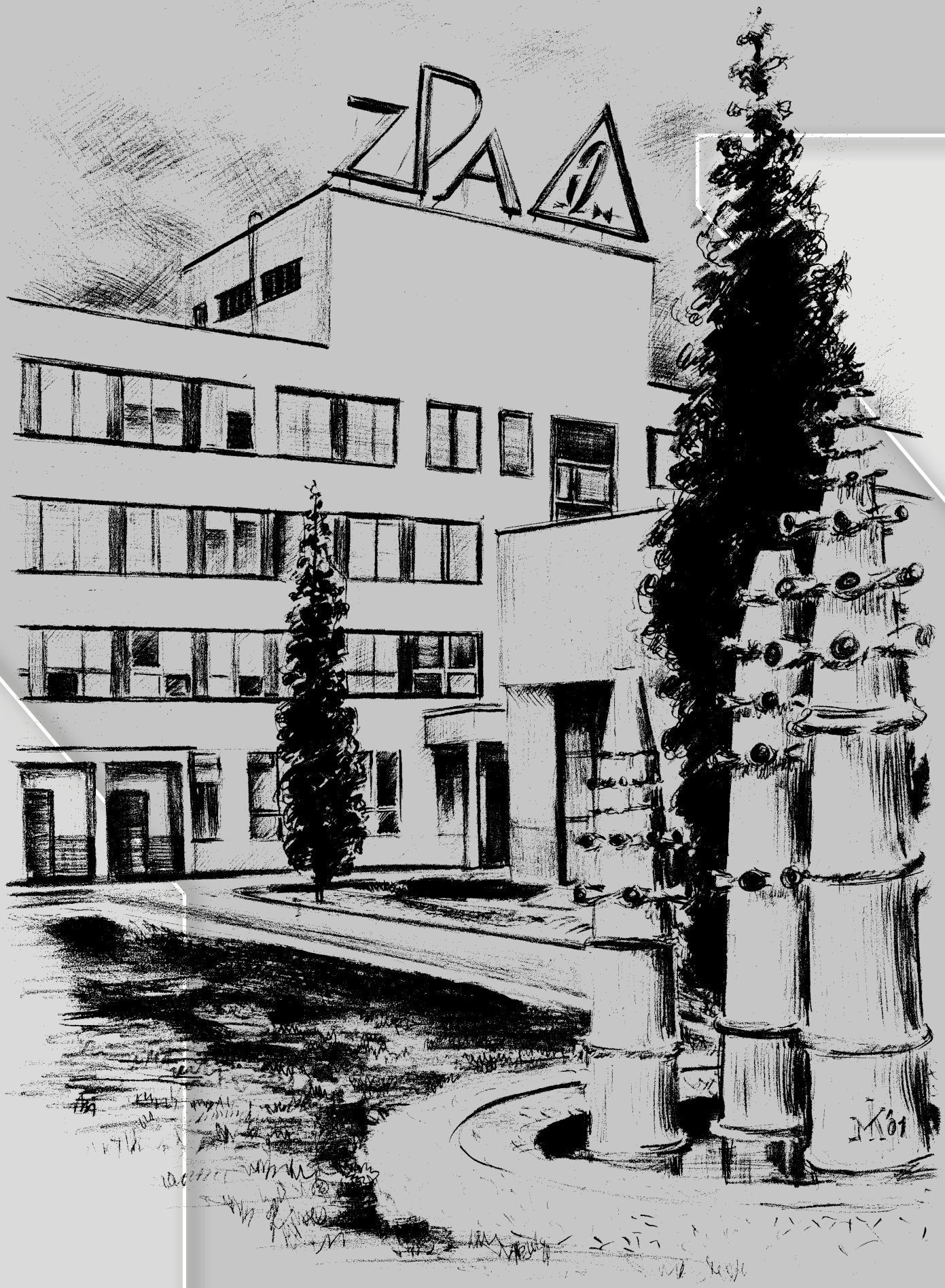

ZPA Pečky, a.s. is certified company in accordance with ISO 90001 as amended.

CONTENS

1. **Application** 3
2. **Operating conditions; Operating position** 3
3. **Operation Mode, Service life of actuators** 4
4. **Technical data** 5
5. **Actuator outfit** 6
6. **Electric parameters** 7
7. **Description of actuator** 8
8. **Electronic outfit** 9
   Table – basic parameters 36–39
   Dimensional sketch of electric actuators MODACT MONED, MOPED, MONEDJ 40–44
9. **Packing and storing** 45
10. **Checking of the instrument function and its location** 45
11. **Attachment to a fitting** 45
12. **Adjustment of the actuator with a valve** 45
13. **Operation and maintenance** 45
14. **Failures and their removal** 46

List of spare parts 47

1. APPLICATION

The electric actuators **MODACT MONED, MOPED, MONEDJ** are designed for shifting valves and/or other elements for which they are suitable with their reversible rotary motion. Other using than that for controlling valves should be discussed with the manufacturer. The actuators can operate in circuits of remote control. The actuators can also operate in circuits of automatic regulation with the regime S 4 - 25 %; 1200 h^{-1}.

2. OPERATING CONDITIONS, OPERATING POSITION

Operating conditions

The actuators **MODACT MONED, MOPED, MONEDJ** are resistant against influence of operating conditions and external effects of the classes AC1, AD5, AD7, AE4, AE6, AF2, AG2, AH2, AK2, AL2, AM-2-2, AN2, AP3, BA4 a BC3 according to ČSN 33 2000-5-51 ed. 3.

When the actuator is installed on a free area it is recommended to fit it with a light shelter against direct impact of atmospheric effects. The shelter should overlap the actuator contour by at least 10 cm at the height of 20 – 30 cm.

The electric actuators can be installed in areas with non-flammable and non-conductive dust, provided that this does not adversely influence their function. Here, it is necessary to strictly observe ČSN 34 3205. It is recommended to remove dust as soon as its layer is about 1 mm thick.

Notes:

The area under a shelter means the one where falling of atmospheric precipitations under an angle up to 60° from the vertical is prevented.

The electric actuator must be installed in a place where cooling air has a free access. Minimum distance from a wall for access of air is 40 mm. Therefore, the area where the electric actuator is installed must be sufficiently large, clean and ventilated.

Temperature

Surrounding temperatures for **MODACT MONED, MONED Control** actuators are from -25 °C to +70 °C and from -40 °C to +60 °C.

Surrounding temperatures for **MODACT MOPED, MOPED Control** actuators are from -25 °C to +60 °C and from -40 °C to +60 °C.

Surrounding temperatures for **MODACT MONEDJ, MONEDJ Control** actuators are from -25 °C to +70 °C.

Relative humidity from 10 % to 100 % with condensation.

Classes of external effects – extract from ČSN 33 2000-5-51 ed 3.

Class

1) AC1 – above-sea level ≤ 2000 m
2) AD5 – spouting water; water may spout in all directions
   AD7 – shallow immersion, possible sporadic partial or full coverage (only MOPED)
3) AE4 – slight dust formation
   AE6 – strong dust formation
4) AF2 – occurrence of corrosive or polluting agents is atmospheric; presence of corrosive pollutants is significant

5) AG2 – mean mechanical strain; in normal industrial operations
6) AH2 – mean vibrations; in normal industrial operations
7) AK2 – serious risk of plant and moulds growth
8) AL2 – serious risk of occurrence of animals *(insects, birds, small animals)*
9) AM-2-2 – normal level of signal voltage. No additional requirements.
10) AN2 – mean solar radiation. Intensity > 500 and ≤ 700 W / m2
11) AP3 – mean seismic impacts; acceleration > 300 Gal ≤ 600 Gal
12) BA4 – capability of persons; instructed persons
13) BC3 – frequent contact of persons with ground potential; persons often touch foreign conductive parts or stand on conductive substrate

Actuator are not intended for use in residential environments and may not secure an adequate protection of receiving a radio signal in these environments.

Corrosion protection

Actuators are standardly delivered with surface treatment corresponding to category of corrosion aggressiveness C1, C2 and C3 according to ČSN EN ISO 12944-2.

On customer's request is possible to do surface treatment correcponding to category of corrosion aggressiveness C4, C5-I and C5-M.

In following table is provided and overview of environment for each categories of corrosion aggressiveness according to ČSN EN ISO 12944-2.

Corrosion aggressiveness level	Example of typical environment	
	Outdoor	**Indoor**
C1 (very low)		Heated buildings with clean atmosphere e.g. offices, shops, schools, hotels.
C2 (low)	Atmosphere with low level of pollution. Mostly outdoor areas.	Unheated buildings, in which may occur condensation, e.g. stocks, sports halls.
C3 (middle)	Urban industrial atmospheres, mild pollution of sulfur dioxide. Seaside areas with middle salinity.	Production areas with high humidity and low air pollution, e.g. food industry, processing factories, breweries.
C4 (high)	Industrial areas and seaside areas with middle salinity.	Chemical plants, swimming pools, seaside shipyard.
C5-I (very high – industrial)	Industrial areas with high humidity and aggressive atmosphere.	Buildings or areas with predominantly continuous condensation and high air pollution.
C5-M (very high – seaside)	Seaside areas with high salinity.	Buildings or areas with predominantly continuous condensation and high air pollution.

Operating position

Working position of actuators **MODACT® MONED, MOPED, MONEDJ** actuators with plastic lubricant – any position.

The actuators with plastic lubricant are labelled *"Filled: solid grease"* on the power box at the side of the hand-wheel.

Actuators with oil charge – position limited only by slope of electric motor axis – max. 15° under the horizontal level. In this way, reducing of service life of rubber sealing of the electric motor shaft by possible fragments or impurities from the oil filling is prevented.

When the actuator is assembled with the electric motor above the horizontal plane the oil filling should be topped up so that reliable lubrication of the motor pinion is ensured.

The actuators with oil filling are not labeled.

3. OPERATION MODE, SERVICE LIFE OF ACTUATORS

Operation mode

According to ČSN EN 60 034-1, actuators can be operated in S2 load category. The operation time at +50 °C shall be 10 minutes, the mean load torque value shall be below or equal to 60 per cent of the maximum switch off torque *(M_V).* According to ČSN EN 60 034-1, the actuators can also be operated in the S4 mode *(interrupted operation with acceleration intervals).* The load factor N/N+R shall be maximum 25 per cent, the longest operation cycle N + R is 10 minutes *(the course of load is shown in the picture).* The maximum number of switching actions in automatic control mode is 1200 actions per hour. The average mean load torque at load factor of 25 per cent and 50 °C shall not exceed 40 per cent of the maximum tripping torque *(M_V).*

The average mean load torque shall not exceed the nominal torque of the actuator.

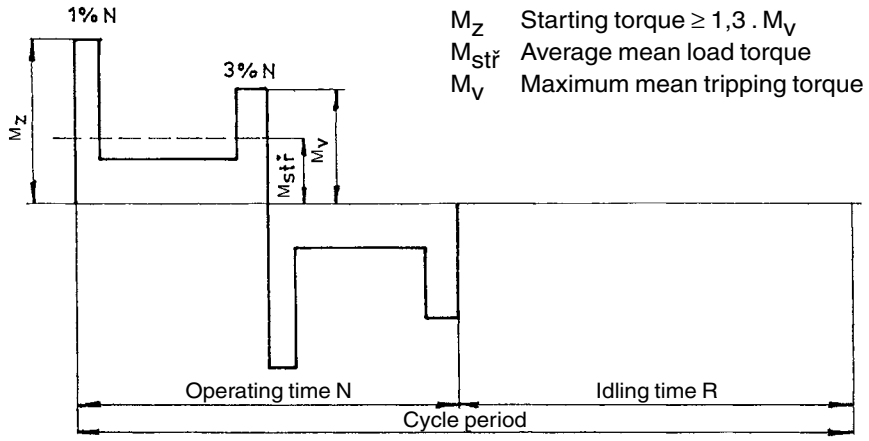

M_Z Starting torque ≥ 1,3 . M_V
$M_{stř}$ Average mean load torque
M_V Maximum mean tripping torque

Course of working cycle

Service life of actuators

The actuator intended for shut-off valves must be able to perform at least 10,000 operating cycles *(C - O - C).*

The actuator intended for regulating purposes must be able to perform at least 1 million cycles with operation time *(during which the output shaft is moving)* at least 250 hours. Service life in operating hours *(h)* depends on load and number of switching. Not always, high frequency of switching influences positively accuracy of regulation. For attaining the longest possible faultless period and service life, frequency of switching is recommended to be set to the lowest number of switching necessary for the given process. Orientation data of service life derived from the set regulation parameters are shown in the following table.

When using reversing contactor unit the service life of actuator is 1 million starts

Service life [h]	830	1 000	2 000	4 000
Number of starts [1/h]	Max. number of starts 1200	1 000	500	250

When using reversing contactless unit the service life of actuator is 3 million starts

Service life [h]	2490	3000	6000	12000
Number of starts [1/h]	3600	3000	1500	750

4. TECHNICAL DATA

Supply voltage

Supply voltage of electric motor: **MODACT MONED, MOPED** 3 x 230/400 V, +10 %, -15 %, 50 Hz ±2 %
3 x 220/380 V +10 %, -15 %, 50 Hz; +3 % -5 %
MODACT MONEDJ 1 x 230 V, +10 %, -15 %, 50 Hz ±2 %
1 x 220 V +10 %, -15 %, 50 Hz; +3 % -5 %
(or according to data on the rating plate)

Actuators designed to operate at another voltage and frequency than those given above are available upon special request. For more details, refer to the Technical conditions.

Protective enclosure

Protective enclosure of actuators: **MODACT MONED, (MODACT MONED Control), MONEDJ** – IP 55
MODACT MOPED (MODACT MOPED Control) – IP 67

Noise

Level of acoustic pressure A max. 85 dB *(A)*
Level of acoustic output A max. 95 dB *(A)*

Tripping torque

Tripping torque is set at the manufacturer according to the customer's requirements within the range given in Table No. 1 or No. 2. If setting of tripping torque is not required maximum tripping torque of the required type number of the electric actuator is set.

Starting torque

The starting torque of the actuator is a calculated value determined by the starting torque of the electric motor and the total gear ratio and efficiency of the actuator. After run reversation, the actuator can produce a starting torque for the duration of 1 to 2 revolutions of the output shaft when torque-limit switching is locked. This can take place in either end position or in any intermediate position.

Self-locking

The actuator is self-locking provided that the load only acts in the direction against motion of the actuator output shaft. Self-locking is ensured by a roller arrest immobilizing the electric motor rotor even in the case of manual control.

In order to observe safety regulations, the actuators cannot be used for driving transportation lifting devices with possible transport of persons or for installations where persons can stand under the lifted load.

Sense of rotation

When looking at the output shaft in the direction towards the control box, the CLOSE direction of rotation is identical with the clockwise sense.

Working stroke

The ranges of working stroke are given in Table No. 1 or No. 2.

Rising spindle

In the design variants with connecting dimensions, Shapes A and C, the actuators can be adapted for mounting to the valve with a rising spindle that projects over the upper end of the actuator output shaft in the end position of the valve. The space reserved for the rising spindle is clearly shown in the dimensional sketches. The user should mount a cylindrical guard of the rising spindle instead of the port cover at the control box top, if required. This guard has not been included in the delivery of the actuator.

Manual control

Manual control is performed directly by a handwheel *(without clutch).* It can be used even when the electric motor is running *(the resulting motion of the output shaft is determined by the function of the differential gear).* When the handwheel is rotated clockwise the output shaft of the actuator also rotates clockwise *(when looking at the shaft towards the control box).* On condition that the valve nut is provided with left-hand thread, the actuator closes the valve.

Torque-limit switches in the actuator are set and work when the actuator is under voltage.

When using the manual control, ie. actuator is controlled mechanically, the torque-limit switches doesn´t work and the valve can be damaged.

5. ACTUATOR OUTFIT

Position indicator

The actuator can be fitted with a display as an option for electronic system DMS2 ED. Actuator with electronic system DMS2 is equipped with two-line display.

Anti-condensation heater

Anti-condensation heater is connected to DMS and DMS ED electronic circuit. Switching of the anti-condensation heater is controlled by a thermostat. From the factory is the switching temperature set to 10°C. The temperature is adjustable by adjusting software DMS2. Input power of the anti-condensation heater is 10W / 230V.

Local control

Local control serves for controlling the actuator from the site of its installation. It includes two change-over switches: one with positions “Remote control - Off - Local control”, the other “Open - Stop - Close”.

The former change-over switch can be built-in as two-pole or four-pole. The change-over switches are installed in a terminal-board box and the control elements on the lid of this terminal-board box.

Dynamic brake

The brake is an optional accessory to the actuators fitted with electronics **DMS2** and **DMS2 ED Control.** As switching elements are used contactors *(mechanical contacts)* or SSR *(modern contactless switching elements).*

After opening the switching element *(contactor or SSR),* it induces dynamic braking moment in the motor for several tenths of second. During the rest period of the actuator no braking torque is developed. The brake reduces dramatically time of the actuator run-down and regulation is thus more precise. The used brakes BR2 are controlled, impulse for action comes form the control unit. Corresponding variant of the brake is chosen according to the electric motor output and the type of switching elements.

Corresponding variant is chosen according to the electric motor power:

contactors	**BR2 550**	**output up to 550 W**
	BR 2,2	**output up to 2,2 kW**
SSR	**BR2 BK 550**	**output up to 550 W**
	BR BK 2,2	**output up to 2,2 kW**

Switching of electric motor, contactor unit

The actuators in variants Control are fitted with built-in reversing contactor combinations or SSR switches. First variant is assembled from two contactors and second variant from contactless switches.

The combination also includes mechanical blocking that prevents both contactors from being closed at the same time. This could, for instance, happen in case of wrong connection of jumpers on the terminal board. The blocking is not dimensioned for long-term action. The over-current relays protects the electric motor against over-loading and is dimensioned with respect to its output. According to the actuator version, the contactors are controlled by the regulator, change-over switch of local control or external input. Control voltage is 230 V / 50 Hz as a standard; it is supplied via contacts of position and/or moment micro-switches. Thus, these micro-switches need not be led out of the actuator. Contactors have defined service life at least 1 million cycles.

To extend the service life we recommend using contactless reversing unit with a minimum service life of 3 million cycles. The standard control voltage is 24V DC. It is used for output into 4 kW or 7.5 kW. The unit consists of semiconductor elements - thyristors.

6. ELECTRIC PARAMETERS

External electric connection

a) Actuator terminal board

The electric actuator is equipped with a terminal board for connection to external circuits. This terminal board uses screw terminals allowing conductors with a maximum cross-section 4 mm^2 to be connected. Access to the terminal board is obtained after removal of the terminal box cover. All control circuits of the electric actuator are brought out to the terminal board. The terminal box is fitted with cable bushings for connecting the electric actuator. The electric motor is fitted with an independent box with a terminal board and a bushing.

b) Connector

According to the customer's requirements the **MODACT MONED, MOPED, MONEDJ** actuators can be fitted with the connector to provide for connection of control circuits. This connector uses screw terminals allowing conductors with a maximum cross-section 4 mm^2 to be connected. ZPA Pečky, a.s. also supplies a counterpart for the cable. In order to connect the cable to this counterpart it is necessary to use special crimping pliers.

Actuator internal wiring

The internal wiring diagrams of the **MODACT MONED, MOPED, MONEDJ** actuators with terminal designation are shown in this Mounting and operating instructions.

Each actuator is provided with its internal wiring diagram on the inner side of the terminal box. The terminals are marked on a self-adhesive label attached to a carrying strip under the terminal block.

Isolation resistance

Isolation resistance of electric control circuits against the frame and against each other is min. 20 MΩ. After a dump test, isolation resistance of control circuits is min. 2 MΩ. Isolation resistance of the electric motor is min. 1.9 MΩ. See Technical specifications for more details.

Electric strength of electric circuits isolation

Circuits of anti-condensation heater		1 500 V, 50 Hz
Electric motor	Un = 1 x 230 V	1 500 V, 50 Hz
	Un = 3 x 230/400 V	1 800 V, 50 Hz

Deviations of basic parameters

Tripping torque	±12 % of max. value of range
Adjusting speed	- 10 % of max. value of range
	+15 % of rated value *(idle run)*

Protection

The actuators are fitted with one internal and one external protection terminal for ensuring protection against electric shock injury according to ČSN 33 2000-4-41. One protection terminal is also installed on the electric motor. The protection terminals are marked according to ČSN EN 60 417-1 and 2 *(013760).*

7. DESCRIPTION OF ACTUATOR

The electric actuators are designed for direct mounting on the controlled element. They are connected by a flange and a clutch according to ČSN 18 6314. The actuator flanges also comply with ISO 5210. The clutches for transmitting motion to the valve are:

shape A	*(with adapter),* according to ISO 5210 and DIN 3210;
shape B1	*(with adapter),* according to ISO 5210 *(shape B according to DIN 3210);*
shape B3	*(without adapter),* according to ISO 5210 *(shape E according to DIN 3210);*
shape D	*(without adapter),* according to DIN 3210;
shape C	*(without adapter),* according to DIN 3338.

The adapters are fitted between the electric actuator and the valve.

The asynchronous electric motor drives, via a drive gearing, the central wheel of the differential gear located in the load-bearing box of the electric actuator *(force gear).* In motor control, the crown wheel of the epicyclic differential is held in constant position by a self-locking screw gear. The hand wheel connected with the screw provides for alternative manual control even when the electric motor is running, without any danger to the operator.

The output shaft is fix-connected with the epicyclic gear catch driver and passes on to the control box where all control elements of the actuator are installed.

The control elements are accessible after the control box lid has been removed.

The actuators designated **MONED, MONEDJ** are used with electric motors with the protective enclosure IP 55; the actuators designated **MOPED** with electric motors with the protective enclosure IP 67. The complete actuator has a protective enclosure according to the electric motor used.

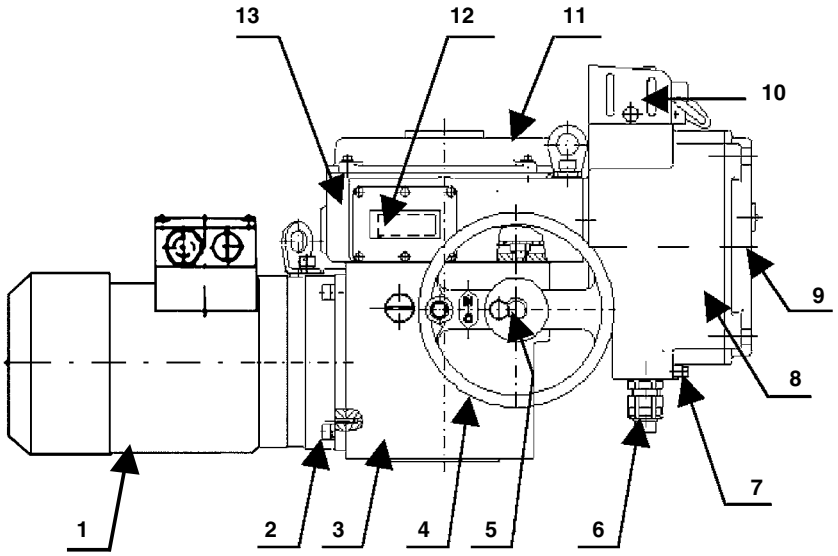

Description:

1 – electric motor
2 – countershaft gear box
3 – power gearing
4 – wheel of manual control
5 – securing screw of hand wheel
6 – cable bushings (connector)
7 – external protective terminal
8 – terminal box
9 – terminal box lid (for DMS2 Analog and Profibus with local control and display)
10 – block of local control BMO
11 – control box lid
12 – display
13 – control box

Fig. 1 – ***Actuator set-up (with electronic system DMS2 ED)***

8. ELECTRONIC OUTFIT

Electro-mechanical control board is replaced with the electronic system **DMS2** or **DMS2 ED.** Both systems scan position of the output shaft and torque of the electric actuator by contact-free magnetic sensors. Long service life is guaranteed for the contact-free sensors that do not get mechanically worn.

The sensor of the output shaft position is absolute and does not require any backup power supply in case supply voltage is disconnected during operation of the electric actuator. Both systems can be set and monitored by a computer with controlling program *(set parameter can be backed up on a computer)* or manually without a computer *(for the electronics DMS2, parameters can be manually set and it can be checked without computer only if the system is equipped with a display and local control).* They contain diagnostic functions - error messages on the display, memory of recent failures and number of occurrences of respective failures.

The more simple system **DMS2 ED** substitutes the electro-mechanical board and/or provides for controlling the electric actuator by input analog signal as in the version Control.

The system **DMS2** enables the electric actuator to be used for two-position and three-position regulation or to be connected to the industrial bus bar Profibus.

DMS2 ED

Basic outfit:

Control unit	main part of the system DMS2.ED - includes microcomputer, position sensor, 3 signal lamps LED, 4 push-buttons for simple setting and checking the actuator, connectors for connecting the torque sensor, source board, and interface RS 232 *(connection of computer for setting and diagnostics).*
Torque unit	
Source unit	electronic power supply, user's terminal board *(connection of power supply and control signals)*, 2 torque relays, 2 position relays, 2 signalling relays, 1 relay for signalling errors *(READY),* switch of resistance anti-condensation heater, connectors for connecting electronic brake, resistance heater of analog module, and connector for interconnection with the control unit.

Optional outfit:

Analog module	output of feed-back signal 4 – 20 mA, in version CONTROL input of control signal 0/4 – 20 mA
Position indicator	LED display
Local control	
Reversing relays	

Parameters:

Scanning of position	contact-less, magnetic
Scanning of torque	contact-less, magnetic
Working stroke	see Tables 1, 2
Torque blocking	0 – 20 s at reversing in limit positions
Input signal	0*(4)* – 20 mA with switched on regulator function Local/Remote control, Local open/close
Output signal	7 x relay 250 V AC, 3 A *(MO, MZ, PO, PZ, SO, SZ, READY)* Position signal 4 – 20 mA max. 500 Ω, active/passive, galvanic-isolated, LED display
Power supply of electronic	230 V AC, 50 Hz, 4 W, over-voltage category II

Realization:

Replacement of electric-mechanical board	the provided relay contacts substitute position, torque and signalling micro-switches; current feed-back signal 4 – 20 mA can also be brought out; the actuator is controlled by the superior control system with signals ***"open"*** and ***"close".***
CONTROL	The electronics covers also function of the regulator; the output shaft position is controlled by analog input signal.

Function and setting of output relays

The output relays replace end-limit micro-switches; to some extent, function of the output relays differs according to chosen mode of electronics or it can be selected, preferably by the setting program.

Relay MO, MZ, SO, SZ

Relay	DMS2 ED	DMS2 ED Control
MO	***torque open*** *(also changes-over to errors)*	***motor open***
MZ	***torque closed*** *(also changes-over to errors)*	***motor close***
PO	***position open***	***torque open*** *(also changes-over to errors)* + optional tripping in position open *(parameter Tripping)*
PZ	***position closed***	***torque closed*** *(also changes-over to errors)* + optional tripping in position closed *(parameter Tripping)*

In the version Control, the **function of relay MO/MZ** is same as that of motor relays.
Their operation is controlled by:

– **regulation loop** *(deviation of required and actual position)*
– **active errors**

Any induced active error will change over both relays to a standstill position *(coils not energized).* In case of errors, the relays with a function of torque relays *(in both versions **DMS2 ED** and **DMS2 ED Control**)* are also controlled.

Relays SZ, SO, READY

Relay **3/SZ**
- It usually signalizes position closed, it can be changed-over to any offered signalization
Relay **4/SO**
- It usually signalizes position open, it can be changed-over to any offered signalization

Relay **READY**
- It usually signalizes errors + warning + not remote, it can be changed-over to any offered signalization

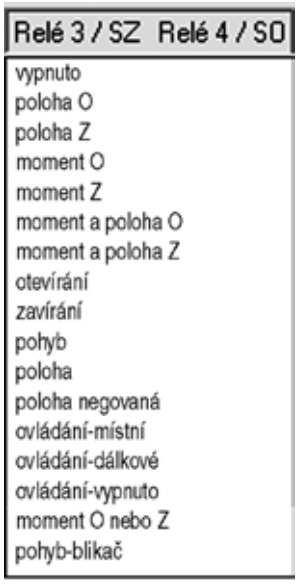

Relay 3/SZ Relay 4/SO

vypnuto	OFF
poloha O	position O
poloha Z	position Z
moment O	torque O
moment Z	torque Z
moment a poloha O	torque + position O
moment a poloha Z	torque + position Z
otevírání	opening
zavírání	closing
pohyb	motion
poloha	position
poloha negovaná	negated position
ovládání-místní	local control
ovládání-dálkové	remote control
ovládání-vypnuto	control OFF
moment O nebo Z	torgue O or Z
pohyb-blikač	motion - blinker

Ready Relay

vypnuto	OFF
varování	warning
chyby	errors
varování nebo chyby	warning or errors
chyby nebo není dálkové	errors or no remote
chyby nebo var. nebo není dál.	errors or warning or no remote
moment O nebo Z	torgue O or Z

For the SO and SZ relays the following functions were added:
Moment O negated: when the set torque is reached in the open direction, the relay is disconnected.
Moment Z negated: When the set torque is reached in the closed direction, the relay is disconnected.
Moment O or Z is negated: When the set torque is reached in the closed or open direction, the relay is disconnected.

Setting program

The setting program is same for communication with the electronics DMS2ED and DMS2. The users' version can be freely downloaded.

Note: *In the window "Parameters" of the setting program, column "Access", the word "NO" designates parameters that cannot be changed by the user (change of these parameters is blocked).*

Parametr	Změna	Chyba	Přístup	
Setrvačnost [0.1%]			NE	5
Setr. Doběh [0.1s]			NE	6
Necitlivost [%]				1

Parametr – Parameter
Změna – Change
Chyba – Error
Přístup – Access
Setrvačnost (0,1 %) – Inertia [0.1 %]
Setr. Doběh (0,1 s) – Inertial run-out [0.1 s]
Necitlivost (%) – Insensitivity [%]
NE – NO

PROCEDURE OF SETTING PARAMETERS BY MEANS OF PUSH-BUTTONS

For simple programming of required operating parameters, the control unit is fitted with four push-buttons: **MENU, P, O, C** and three signal lamps.

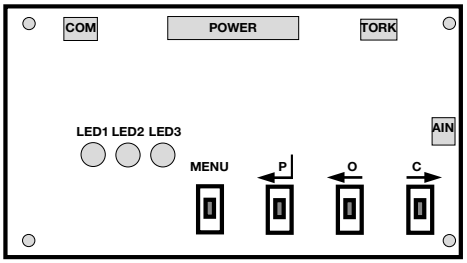

Colours of diodes:
LED1 – yellow *(menu number)*
LED2 – red *(parameter value)*
LED3 – green

Push-buttons and signal lamps LED on control unit DMS2.ED.S and DMS2.ED.S90

Yellow	Red	Green	State
-	-	-	System without feeding
-	-	lit on	Everything OK – working regime *(remote, local or switched off control)*
-	blinking	lit on	Error or warning – working regime *(remote, local or switched off control)*
lit on	-	lit on	Enter or exit of Setting of parameters by means of push-buttons or Setting of parameters by means of PC
blinking	-	lit on	Setting of parameters by means of push-buttons
blinking	blinking	lit on	
blinking	blinking	lit on	

In adjustment, follow the paragraphs “VERIFICATION of APPARATUS FUNCTION And its LOCATION”, “fitting on VALVE” and “ADJUSTMENT of ACTUATOR with VALVE” of these instructions.

For safety reasons, the system is delivered in the state of induced error of Calibration when the functions are limited in order to reduce the risk of damage to the actuator by wrong wiring.

Record of position CLOSED, OPEN and AUTOCALIBRATION

– The actuator must be adjusted in such a way that the recorded position would switch off the actuator before it is switched off by torque. For tight closure, the torque relay for torque Closed is only connected into the control circuit. The actuator can be shifted either manually or electrically. The actuator in version CONTROL can be started from menu MOTOR in program DMS2. In this case, the actuator does not react to the set position and can only be stopped by the torque relay. In controlling from menu MOTOR, no torque may be induced. The torque must be left manually.

If, during adjustment, the torque is reached in the end-limit position, the torque must be left by means of a hand wheel.

– The actuator is set to position Closed and position Closed is stored by long pressing of push-button C *(without entering the Menu).*
– The actuator is set to position Open and position Open is stored by long pressing of push-button O.
– The calibration routine is started by means of push-button P *(in remote control)* that, in the three-position regulation, will measure actual inertial masses of the system and store them into the memory of the control unit. In the two-position regulation, pressing of push-button P only cancels the error of Calibration.
– In recording the end-limit positions, signalling relays and the position transducer are also set.
– In case the actuator stroke is to be increased and the switching off is set to “from position”, the actuator will switch off during shifting in position O or 100 %. To further change the position, press C or O, and, while keeping it depressed, the actuator can be further shifted. After required position is reached, it is stored to memory by pressing push-button C or O.

Parameters that can be changed by user are set by manufacturer as follows:

1. Tripping torques:	100% or required value *(it is not recommended to change the value without consulting the supplier of the valve, etc.).*
2. Relay 3 and relay 4:	signalization SZ 1 % and SO 99 % of stroke
3. Time of blocking:	2 – 8 s according to rate of actuator shifting
4. Position of blocking:	5 % of stroke from end-limit positions *(it is not recommend to change the value by more than 10 %)*
5. Characteristics of position transducer:	closed 4 mA, open 20 mA
6. Relay READY:	errors + warning + not remote

In version CONTROL:

1. Setting of control signal:	closed 4 mA, open 20 mA
2. Insensitivity of actuator in regulation:	1 % *(it is not recommended to set insensitivity higher than 3 %)*
3. Response in case of loss of control signal:	stop
4. Way of switch off in end-limit positions:	torque + PO + PZ

Overview of MENU

BROWSING THROUGH MENU

- The setting regime is entered by pressing and keeping depressed push-button **MENU** for at least 2 s; LED1 is then lit on.
- Shortly press **MENU** to select the basic MENU – menu M1 to M8 *(LED1 signalizes the menu number);* by short pressing of P, O, C they are entered *(LED2 signalizes particular parameter).*
- Shortly press P to select required value of the parameter. In case the parameter can be set to several values, they are changed by short pressing of P *(number of blinking of LED2 indicates its value).* Keep pressing of P to record the chosen parameter; the record is confirmed by lighting on of LED2.
- Shortly press **MENU** to gradually set the required menu and parameters.
- After setting all required parameters, exit the setting menu by pressing and keeping depressed push-button MENU for at least 2 s. The setting menu will also be left in case that no push-button is pressed within 1 minute.

MENU 1 – Setting of tripping torques

- After entering the menu by means of push-button C or O, select required torque.
- Shortly press P to select the set value of the parameter 50 – 100 % *(5 – 10 blinking of LED2)* and keep pressing push-button P to store the parameter to memory.

MENU 2 – Setting function of signalling relays

- Basic setting of the signalling relays is SZ 1 % and SO 99 % of stroke.
- In case different setting is required, it can be changed after shifting the actuator to required position by means of push-button C or O.
- Using push-button P, perform basic setting SZ 1 % and SO 99 % of stroke.

MENU 3 – Setting of blocking of torque in end-limit positions

- Shortly press P to select the set value of blocking time 0 – 20 s *(0 – 20 blinking of LED2)* and keep pressing push--button P to store the parameter to memory.
- Keep pressing push-button C to store actual position for blocking torque on the side Closed to memory.
- Keep pressing push-button O to store actual position for blocking torque on the side Open to memory.

MENU 4 – Setting transducer characteristics

- Shortly press P to select the value 4 – 20 mA – 1x blinking of LED2 or 20 – 4 mA – 2x blinking of LED2, and keep pressing push-button P to store the parameter to memory.

Other menus only serve for board setting in version Control

MENU 5 – Setting control signal in 3P regulation

- Shortly press P to select value 4 – 20 mA - 1x blinking of LED2,
  or 20 – 4 mA - 2x blinking of LED2,
  or 0 – 20 mA - 3x blinking of LED2,
  or 20 – 0 mA - 4x blinking of LED2
  and keep pressing push-button P to store the parameter to memory.

MENU 6 – Setting insensitivity in three-position regulation

- Shortly press P to select value 1 – 10 % *(1 – 10x blinking of LED2)* and keep pressing push-button P to store the parameter to memory.

Main window of setting program

MENU 7 – Response in case of losing control signal in three-position regulation

– Shortly press P to select value OPEN - 1x blinking of LED2,
or CLOSE - 2x blinking of LED2,
or STOP - 3x blinking of LED2,
and keep pressing push-button P to store the parameter to memory.

MENU 8 – Way of switching off in end-limit positions in 3P regulation

– Shortly press P to select value TORQUE - 1x blinking of LED2,
or TORQUE + PO - 2x blinking of LED2,
or TORQUE + PZ - 3x blinking of LED2,
TORQUE + PO + PZ - 4x blinking of LED2,
And keep pressing push-button P to store the parameter to memory.

PROCEDURE OF SETTING PARAMETERS BY PROGRAM DMS2

– Before starting the actuator, it is necessary to set some parameters of the system by means of program DMS2 on PC.
– For safety reasons, the system is delivered in the state of induced error of Calibration when the functions are limited in order to reduce the risk of damaging the actuator by wrong wiring. In controlling the actuator from program DMS2, its run is stopped when any torque is induced.

Working torque

– Check and, if necessary, set the value of working torque 50 – 100 % in program DMS2, which you change only after consultation with the armature manufacturer.

Record of positions OPEN, CLOSED and AUTOCALIBRATION

The actuator should be adjusted so that the recorded position would stop the actuator before it is switched off by torque. The actuator is shifted manually or electrically. The actuator in version CONTROL can be started from menu MOTOR in program DMS2. In this case, the actuator does not respond to the set position and is switched off by torque. In controlling from menu MOTOR, no torque may be induced. The torque should be left manually.

Record of position CLOSED:
– In the required position, press push-button Z in the program and confirm the approved record.

Record of position OPEN:
– In the required position, press push-button O in the program and confirm the approved record.

The recorded values are confirmed by pressing push-button START in program DMS2. For the actuator in version CONTROL, change over the actuator to remote control and, by pressing push-button START, start the autocalibration. By short starting of the motor in both directions, the actuator measures inertia and changes over to the regulating regime. Information on the course of autocalibration is signalized next to push-button START. The autocalibration cannot be started in case the torque relay is switched off. The torque should be left manually.

Other parameters

Check and, if necessary, change other parameters:

Control signal	4 – 20 mA, 20 – 4 mA, 0 – 20 mA, 20 – 0 mA
Insensitivity	1 – 10 %
Function in case of error	open, close, stop, to position
Time of torque blocking in end-limit positions	0 – 20 s
Position of torque blocking in end-limit positions	1 – 10 %
Output of position signal	4 – 20 mA, 20 – 4 mA
Function READY	combined error

Note: *Signal READY is brought out as contact of the relay on the terminal board. If the state ERROR or WARNING is not detected (setting can be made of what is to be evaluated as error or warning), the contact is closed; in case of error, warning, or if feeding of electronics is interrupted, the contact is opened. The state of the relay READY is indicated by the LED diode on the source board.*

AUTODIAGNOSTICS

DMS2 ED performs continuously its diagnostics and, if a problem is detected, it reports warning or error. The warning or error is signalized by LED of the display and, possibly, by relay Ready. The warning has no effect on operation of the system, the error stops the actuator.

Assigning or switching off of warnings and errors is set in window “Warning and error” of the setting program *(it is opened by clicking one of parameters Warning 1 – 4 or Error 1 – 4 in window “Parameters”).*

The error or warning are reported by opening the relay READY and by blinking of the red LED diode on the control unit. Particular error is specified by program DMS2 or on the display.

RESTORING PARAMETERS FROM BACKUP

With the feeding switched off, press push-buttons O and C at the same time. Then, switch on feeding and wait until red and yellow LED diodes light on. The backup parameters are read.

In DMS2 setting program we will restore the parameters from backup by pressing button "Restore".

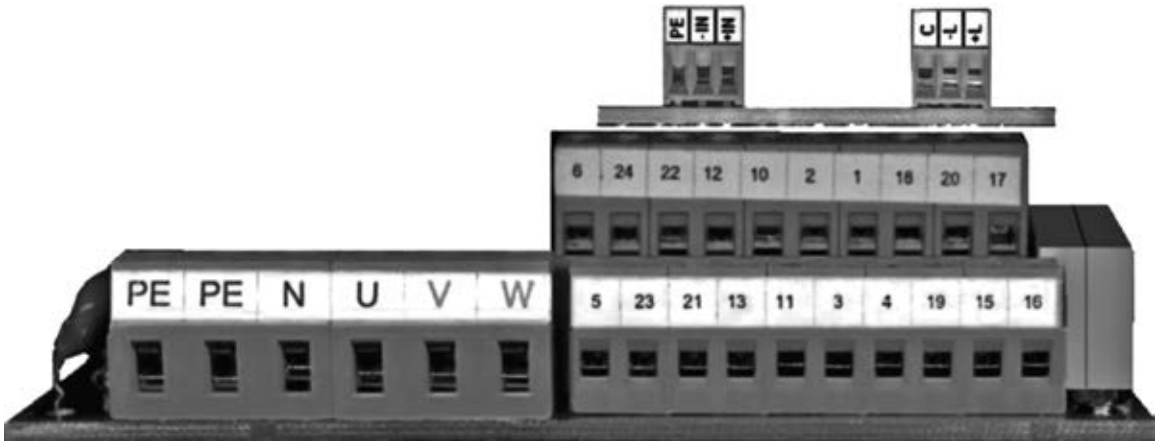

Terminal board of the actuator with electronics DMS2ED

If the actuator is of the single-phase version the power supply is connected only to terminals **PE, N, U.** The terminals **V, W** remain non-connected. If the actuator is of the version “Replacement of electric-mechanical board” with three-phase electric motor without power relays, the electric motor is connected to a separate terminal board *(not shown here).*

List of warnings and errors

No.	Name	Warning[1]	Error[1]	Description
1	Safe *	X		Input Safe activated
2	Control signal	X		Value of control signal ≤ 3 mA *(it applies to ranges 4 – 20/20 – 4 mA)*
4	Torque	X		Induced torque beyond end-limit positions or disconnected torque sensor
6	Thermal protection		X	Thermal protection input activated
7	Sense of rotation		X	Reverse sense of rotation *(for CONTROL only)*
8	EEPROM	X		Wrong control sum of parameters in EEPROM
9	RAM		X	Wrong control sum of parameters in RAM
10	Parameters		X	Wrong parameters in EEPROM
11	Setting regimes	X		Setting regime from push-buttons or PC
12	Torque sensor		X	Disconnected or defective torque sensor
13	Sensor 1		X	Error of sensor of position 1 *(lowest stage)*
14	Sensor 2		X	Error of sensor of position 2
15	Sensor 3		X	Error of sensor of position 3
16	Sensor 4		X	Error of sensor of position 4 *(highest stage)*
17	Calibration	X		Autocalibration not carried out
18	Torque setting		X	Wrong setting of torques *(parameters Torque O/Z 50/100 %)*
19	Stroke		X	Wrong setting of stroke *(parameters Position O/Z)*
20	Rotation error		X	The actuator does not rotate
21	High temperature	X		Permitted max. temperature exceeded *(parameter Temperature max.)*
22	Low temperature	X		Permitted min. temperature exceeded *(parameter Temperature min.)*
23	LCD internal *	X		Display of LCD internal does not communicate or not added in parameter CAN of configuration
24	LCD external *	X		Display of LCD external does not communicate or not added in parameter CAN of configuration
25	Fieldbus *	X		Module of industrial bus does not communicate or not added in parameter CAN of configuration
26	CAN *	X		Error of bus CAN *(short circuit, interruption, only sensor communicates)*
27	Fieldbus activity*	X		Connection to industrial bus not active
28	Phase *		X	Inverse order of phases or some phase missing
29	Relay of service life	X		Service life of relay MO/MZ at CONTROL exceeded (parameter Relay of service life)
30	Reset	X		Non-standard Reset of unit induced *(watchdog etc.)*
31	ROM		X	Wrong control sum of program in ROM
32	CAN version *	X		Sensor, LCD display or module Fieldbus have incompatible versions of firmware
33	Wrong command *		X	Commands Open and Close entered at the same time
34	Wrong inertia	-	-	Wrong inertia measured by autocalibration *(for autocalibration only)*
35	Wrong run-down	-	-	Wrong run-down measured by autocalibration *(for autocalibration only)*
41	Wrong position		X	Servo-drive is in position 25 % behind working stroke

[1]) Assignment can vary depending on the version of firmware of the sensor control unit.
** Applies to DMS2 only.*

Memory of number of induced warnings and errors

– For all ascertained warnings and errors, DMS2.ED uses counters of occurrence of these warnings and errors during operation of the system.
– Values of the counters are stored to the EEPROM memory and are preserved even in case of the power supply fall-out.
– Reading of the counters is possible by means of the program for PC
– Clearing of the counters is possible by means of the program for PC with the level of authorization “SERVICE”.

Memory of recently induced warnings and errors

– DMS2.ED stores three recently induced warnings and errors to the EEPROM memory.
– Recent warnings and errors can be displayed and erased by means of the program for PC.

Example of wiring diagram of electronics **DMS2 ED** in version
Substitution of electro-mechanical board
(actuators MODACT MONED, MOPED, MONEDJ)

E0001

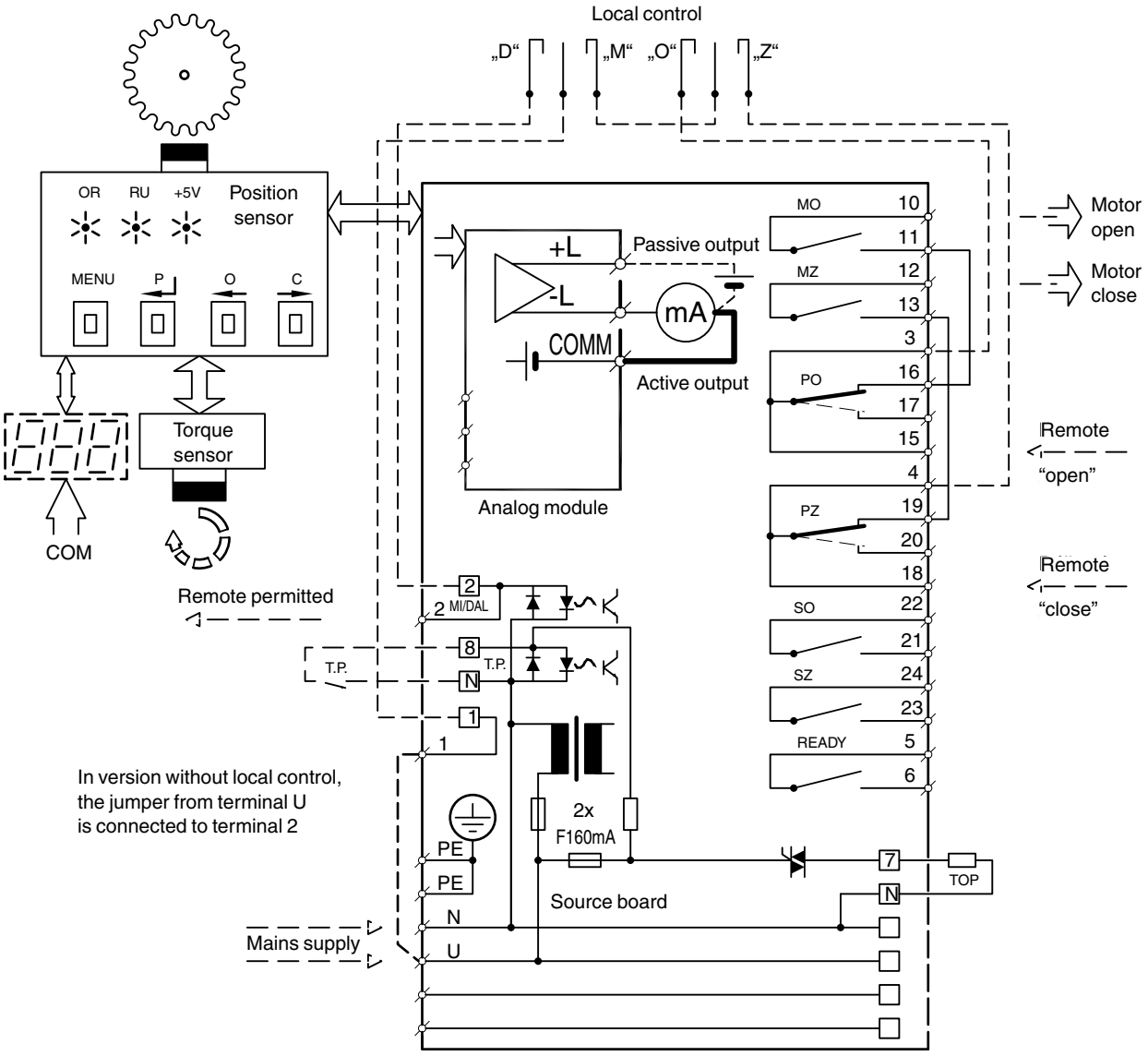

Note: *Here, contacts of relays MO, MZ, SO, SZ are shown with power supply switched off; with power supply switched off contacts PO, PZ are shifted to the position drawn in dashed line.*

Example of wiring diagram of electronics **DMS2 ED** in version **Substitution of electro-mechanical board with connector connection**
(actuators MODACT MONED, MOPED)

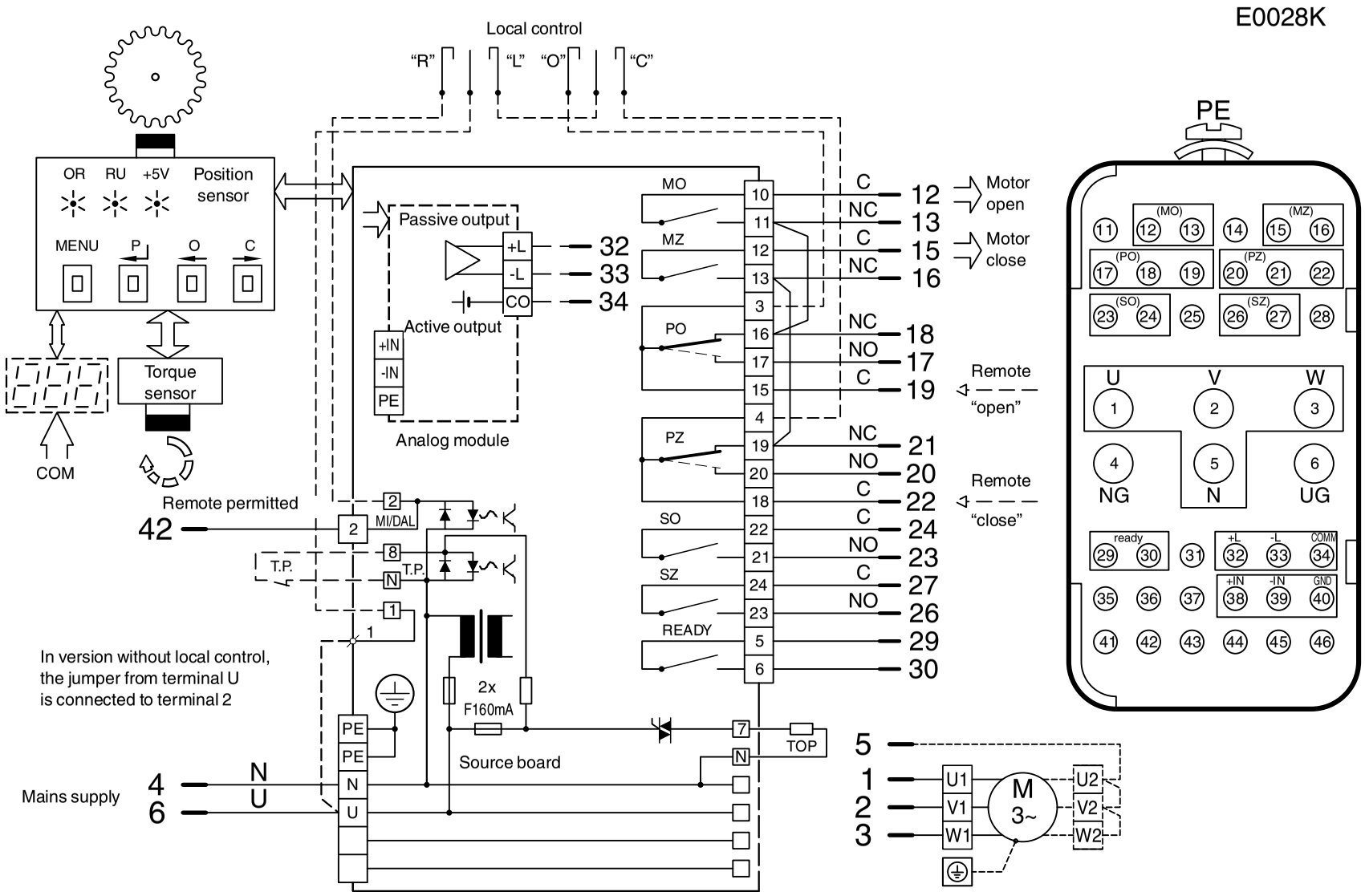

Example of wiring diagram **Substitution of electro-mechanical board with contactors and three-phase electric motor**
(actuators MODACT MONED, MOPED)

E0002

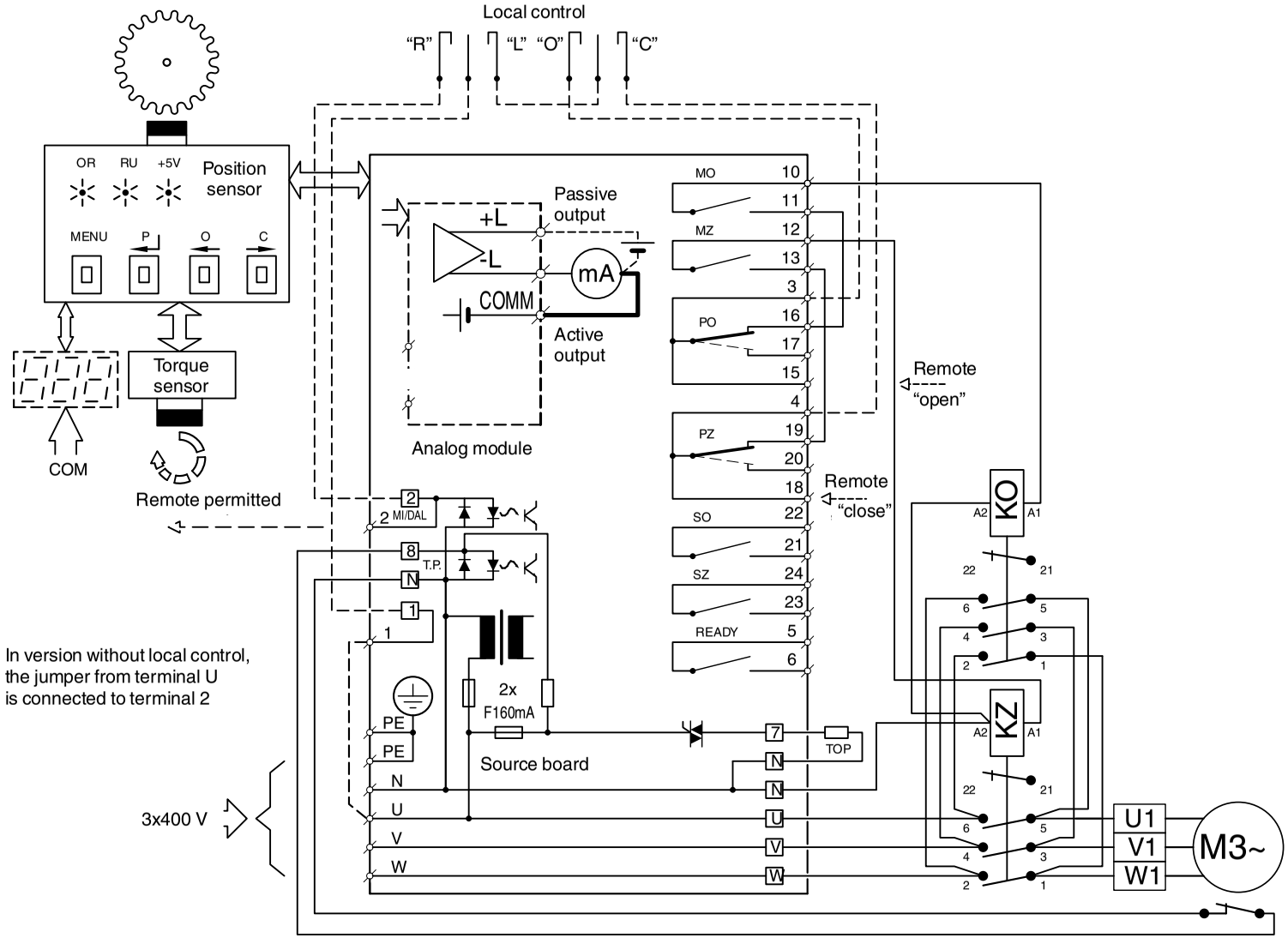

Example of wiring diagram of electronics **DMS2 ED** in version **Control** ***(actuators MODACT MONED, MOPED)***

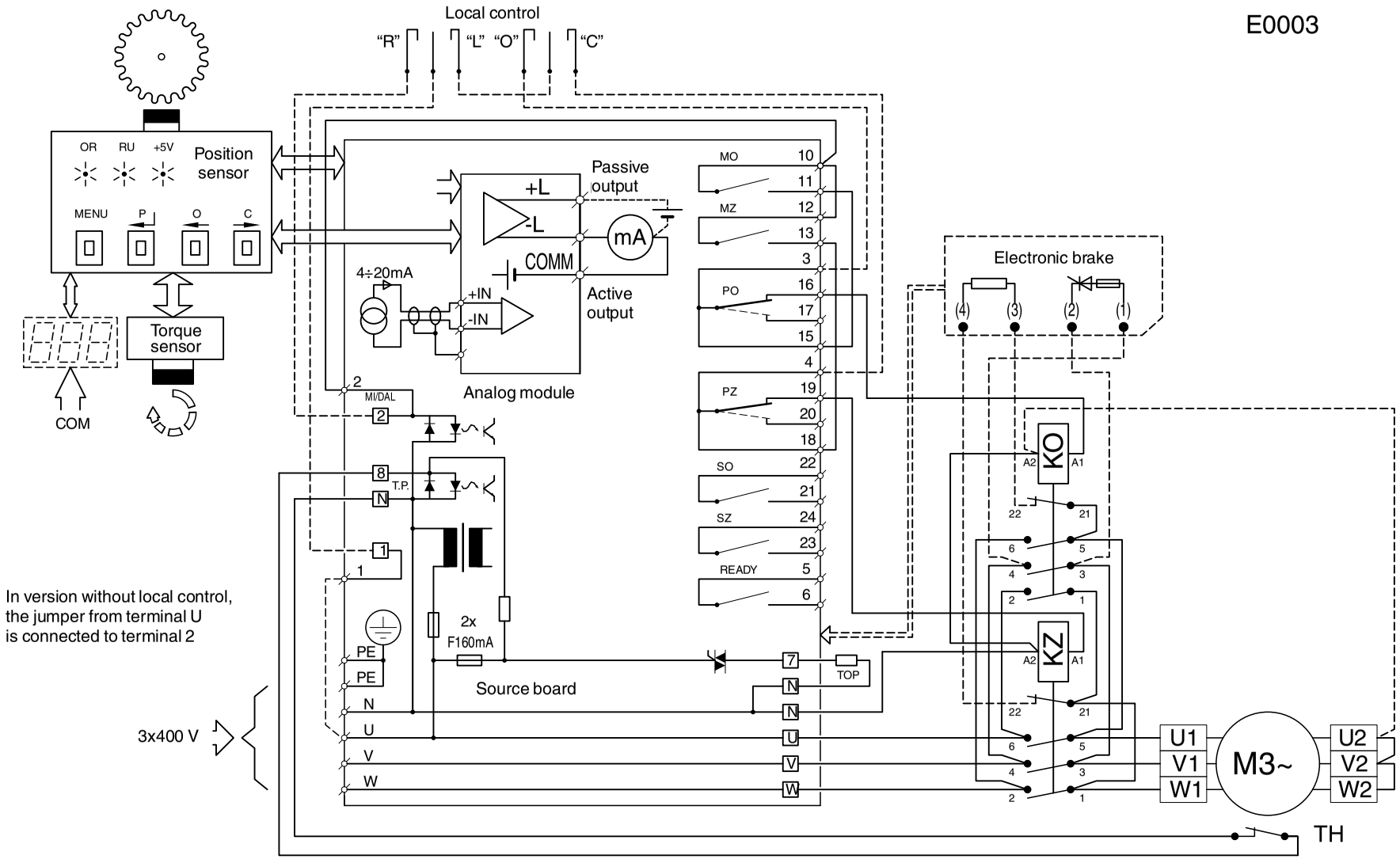

Note: *Here, contacts of relays MO, MZ, SO, SZ are shown with power supply switched off; with power supply switched off contacts PO, PZ are shifted to the position drawn in dashed line.*

Example of wiring diagram of electronics **DMS2 ED** in version **Control with connector connection**
(actuators MODACT MONED, MOPED)

E0027K

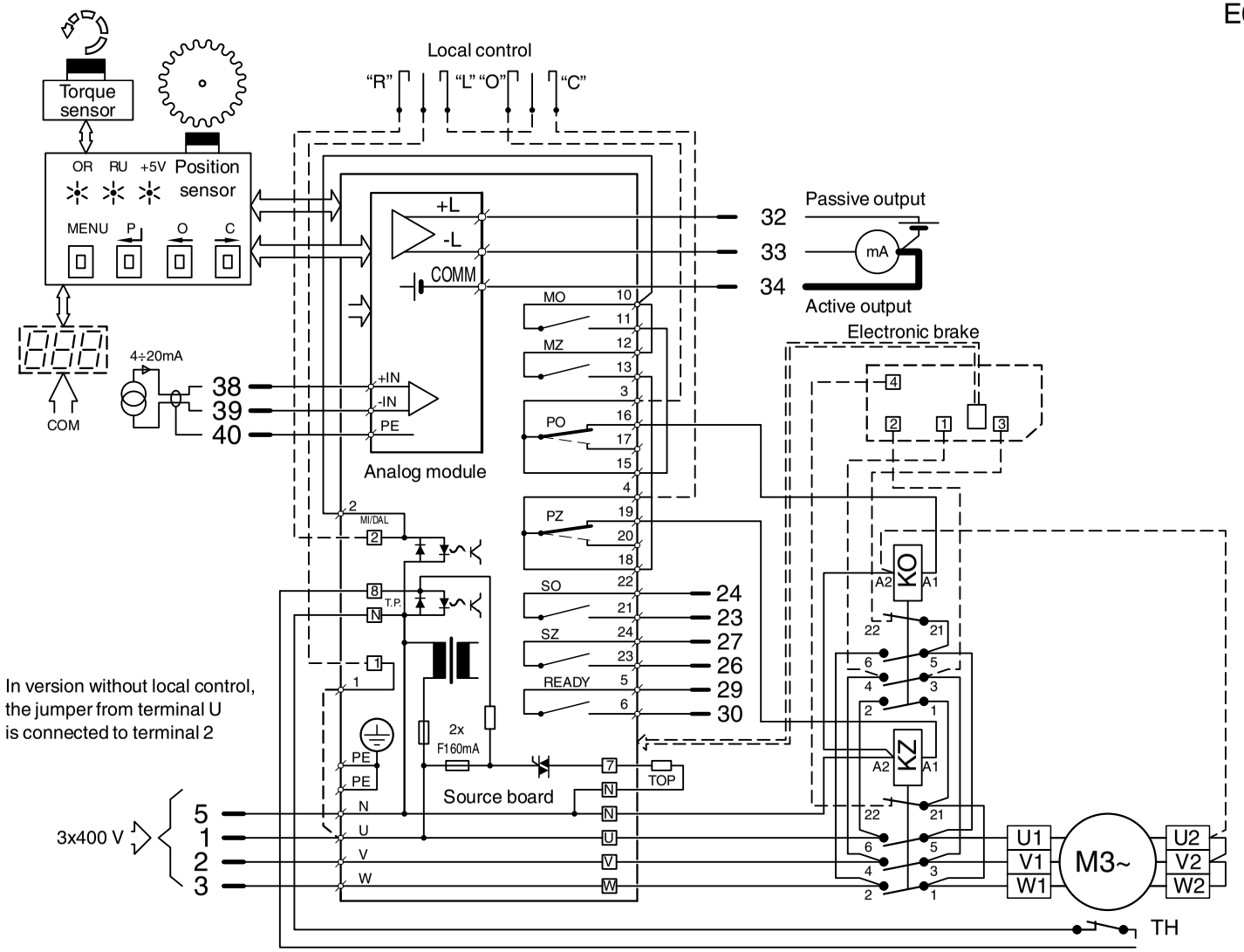

Example of wiring diagram of electronics **DMS2 ED** in version **Control with contact-less switching of electric motor**

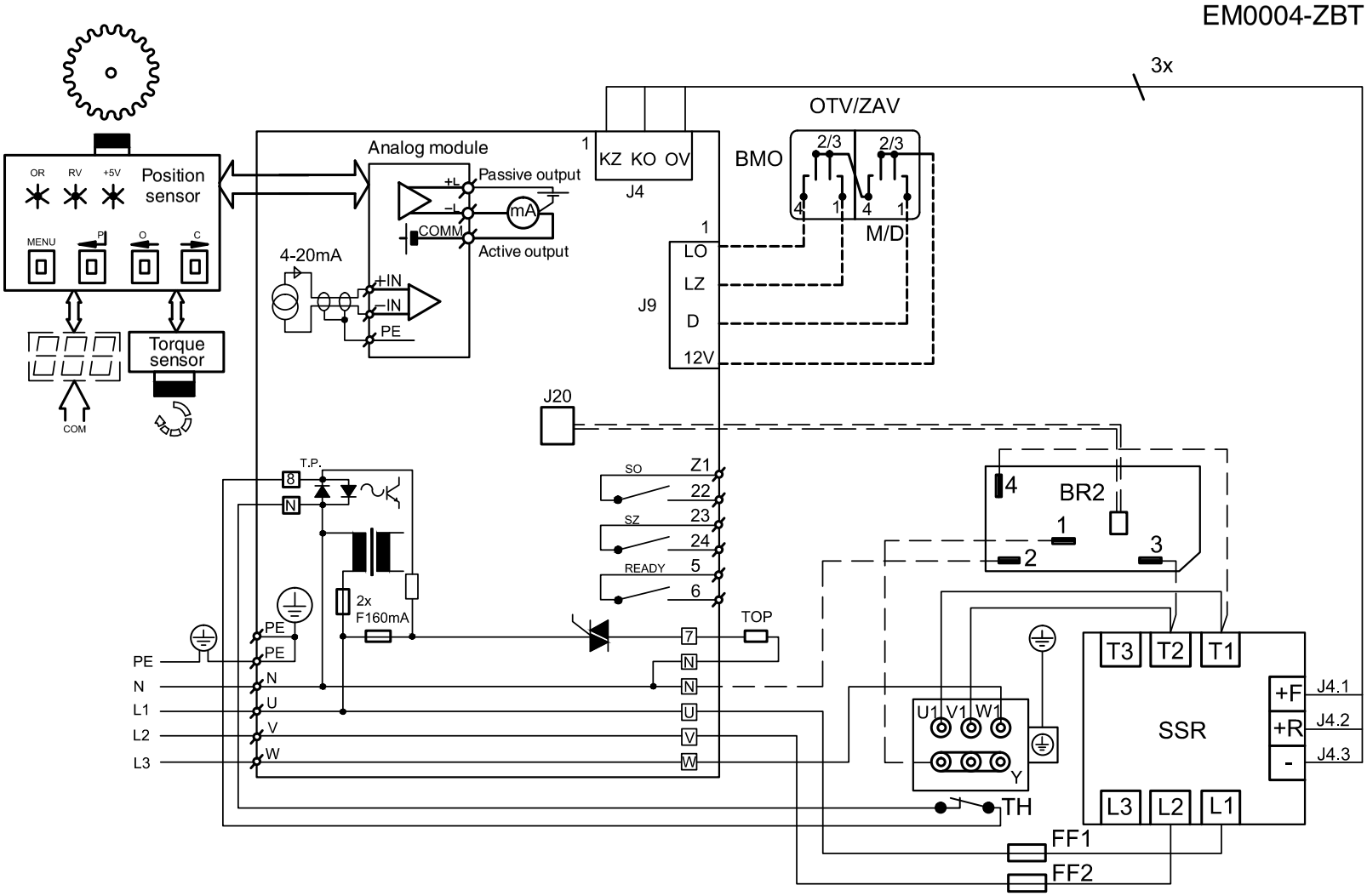

Note: *Here, contacts of relays MO, MZ, SO, SZ are shown with power supply switched off; with power supply switched off contacts PO, PZ are shifted to the position drawn in dashed line.*

Example of wiring diagram of electronics **DMS2 ED** in version **Control** with contact-less switching of electric motor with connector connection

EM0043K-ZBT

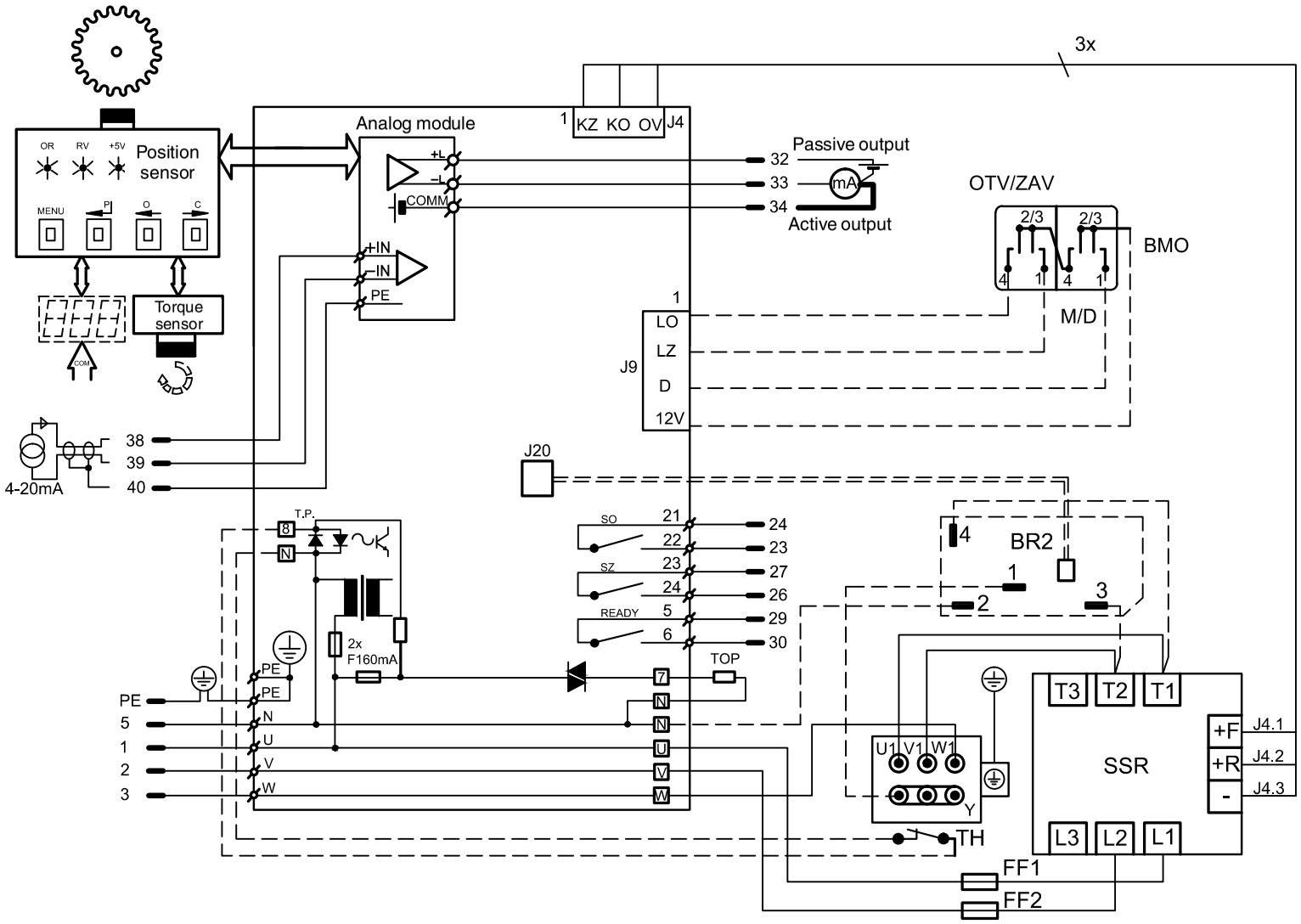

DMS2

Main properties of DMS2:

– Complete control of the actuator run of the two- and three-position regulation or connection to the industrial bus Profibus.
– Synoptic signalization of operation and service data on the character LCD display 2 x 12.
– Autodiagnostics of error reports on the LCD display, memory of recent failures and number of occurrences of respective failures.
– Setting of parameters by the PC program and by local control provided that the actuator is fitted with local control.

Basic outfit:

The control unit is the main part of the system DMS2; it comprises:

– Microcomputer and memory of parameters
– Position sensors
– 2 signalling LED
– Connectors for connecting the torque sensor, relay board, and two-position inputs, source board, communication adapter, LCD display, and local control

Torque unit provides for scanning torque by the contactless sensor

Source unit – two types exist:

DMS2.ZAN for the two-position or three-position control of the actuator by binary signals “Open” and “Close” or by analog signal 0*(4)* – 20 mA.

DMS2.ZPR for controlling the actuator by the industrial bus Profibus.

Both units include the feeding source for electronics, two relays for controlling the power switches *(contactors or contactless switches)* of the electric motor, guarding of sequence of phases *(in case the actuator is fed by three-phase voltage),* circuits for connecting the anticondensation heater, and input terminals for connecting the thermo-contact from the electric motor. The units are fitted with the power terminal board for connecting the power supply. The units are fitted with a connector for the display and local control.

Unit DMS2ZAN also contains:

– input circuits for the two-position and three-position control of the actuator and terminals for connecting external control signals
– input of signal SAFE – information on external failure
– relay – total of five; four *(signalling)* can be set for reporting of position, torque, or other operation states of the actuator; the fifth *(Ready)* is used for reporting of errors, warnings, and other states when the actuator cannot faultlessly perform its function, and the terminals to which contacts of the relay are connected
– circuits of the feedback current signal – information on position of the actuator output shaft

Unit DMS2.ZPR also contains:

– circuits for communication with the superior control system through the industrial bus Profibus DP, input and output terminals for connecting the bus, and termination resistors with a switch.

Display unit – two-row display, 2 x 12 alpha-numeric characters
Unit of push-buttons – sensors of push-buttons ***“open”, “close”, “stop”*** and the rotary switch ***“local, remote, stop”.***
The actuator can be fitted with contactors or contactless switching of the electric motor; it can be fitted with an electronic brake.

PROCEDURE OF SETTING PARAMETERS BY PROGRAM DMS2

Before putting the actuator into operation, it is necessary to set some parameters of the system by means of program DMS2 on PC.

Before adjustment, check the actuator according to the paragraph ASSEMBLing And putting the ACTUATOR into operation.

Warning:

For safety reasons (reduced risk of damage to the actuator by wrong wiring), the system is delivered in the state of the induced error of CALIBRATION when the functions are limited and, during controlling the actuator from program DMS2, its run is stopped if any torque is induced.

Note:

The setting program is the same for electronics DMS2 ED. See the figure on page 13 for the main window and the window of Selection of electronics.

Working torque

– Check and, if necessary, set the value of the working torque 50 – 100 % in program DMS2, which you change only after consultation with the armature manufacturer.

Tripping in end-limit positions

- Check and, if necessary, set the way of tripping in the end-limit positions::
- Torque
- Torque + position O
- Torque + position Z
- Torque + position O + Z

End-limit positions - working stroke

- Position Z
  - Shift to position Closed either manually or by means of menu Motor in program DMS2.
  - The actuator can only be controlled by means of the program if no torque is induced. The torque should be left manually.
  - Press push-button Z to confirm consent with the record.
- Position O
  - Shift to position Open either manually or by means of menu Motor in program DMS2.
  - The actuator can only be controlled by means of the program if no torque is induced. The torque should be left manually.
  - Press push-button O to confirm consent with the record.

Autocalibration

- The autocalibration can only be started by means of the program if no torque is induced. The torque should be left manually.
- The autocalibration is started by push-button Start in program DMS2.
- Wait until the autocalibration is completed; information on its course is signalized next to push-button Start.

Other parameters

Check and, if necessary, change other parameters:

Control signal	4 – 20 mA	20 – 4mA	0 – 20 mA	20 – 0 mA
	2 position	Bus		
Insensitivity	1 – 1 0 %			
Function SAFE	Open	Close	Stop	To position
Active SAFE	O V	230 V		
Time of blocking torque in end-limit positions	0 – 20 s			
Position of blocking torque in end-limit positions	1 – 10 %			
Output of position signal	4 – 20 mA	20 – 4 mA		
Function READY - Combined error	Switched off	Warning	Errors	Warning or error
	Errors or not remote	Errors or warning or not remote	Torque “O” or “Z”	
Relay 1 – 4	Switched off	Position O	Position Z	
	Torque O	Torque Z	Torque and position O	Torque and position Z
	Opening	Closing	Motion	Position
	position N	Local control	Emote control	Control switched off
	Torque O/Z	Motion - blinker		
Position Relay 1 – 4	0 – 100 %			

Note: *SAFE - input information on the error of an external device can be set so that the actuator would respond as to its own error.*

Autodiagnostics

The table List of errors – same as for electronics DMS2 ED *(page 14)*

Memory of number of induced errors

- For all detected errors, DMS2 uses the counter of occurrence of these errors during operation of the system.
- Values of the counters are stored to the EEPROM memory and are preserved even in case of the power supply fall-out.
- Reading and clearing of the counters is possible by means of the program for PC.

Memory of recently induced errors

– DMS2 stores 3 recently induced errors to the memory EEPROM.
– DMS2 provides for displaying the errors by means of the PC program or the switches of the local/ remote control.
– The display in MENU 22 INFORMATION shows ERROR 1, ERROR 2, ERROR 3. ERROR 1 is the latest error.

Setting parameters by means of push-buttons of local control

Signalization of operation regimes by means of diodes LED on the position sensor board:

Red	Green	State
-	-	System without feeding
-	lit on	Everything OK – working regime *(remote, local, or switched off control)*
blinking	lit on	Error or warning – working regime *(remote, local, or switched off control)*
lit on	lit on	Setting parameters by means of push-buttons or PC

Signalization of operation regimes by means of the display:
The display shows the actuator position in %, the state of local control and/or reaching of torque. In case of an error, blinking of this state alternates with number of actual error. In case of more errors, these errors repeat cyclically.

Overview of MENU

	Name	Parameter value	Meaning
1	JAZ/LANGUAGE	CESKY	Menu LANGUAGE
		ENGLISH	
2	POLOHA O, Z	POL.OTEVR.	End-limit position Open or Closed
		POL.ZAVRENO	
3	KALIBRACE	SPUSTIT	Starting of autocalibration
4	KONCOVA POL.	MOMENT	Tripping in end-limit positions
		MOMENT+POL.O	
		MOMENT+POL.Z	
		MOMENT+P.O+Z	
5	MOMENT PR. O	50 – 100 %	Working torque Open *(selection 50 – 69 % depends on parameter Torque min.)*
6	MOMENT PR. Z	50 – 100 %	Working torque Closed *(selection 50 – 69 % depends on parameter Torque min.)*
7	CAS BLOK.MOM	0 – 20 s	Time of torque blocking
8	POLOHA BL. O	0 – 50 %	Position of torque blocking Open
9	POLOHA BL. Z	0 – 50 %	Position of torque blocking Closed
10	CPT	4 – 20 mA	Characteristics of current transducer
		20 – 4 mA	
11	RIDICI SIGN.	4 – 20 mA	Analog control signal
		20 – 4 mA	
		0 – 20 mA	
		20 – 0 mA	
12	NECITLIVOST	1 – 10 %	Range of insensitivity
13	SAFE	OTEVIRAT	Response to signal Safe and loss of control signal
		ZAVIRAT	
		ZASTAVIT	
		POLOHA	
14	SAFE AKTIV.	0 V	Active signal Safe
		230 V	
15	TP SAFE	blokuje SAFE	Response with thermal protection activated
		SAFE aktivni	
16	TP NULOVANI	AUTOMATICKY	Zeroing of thermal protection
		MISTNIM OVL.	
		VYPNUTO	
		VAROVANI	
		CHYBY	
17	RELE READY	VAR.+CHYBY	Function of Relay Ready
		CHYBY+NENÍ D	
		VAR+CHYBY+ND	
		MOMENT O/Z	

	Name	Parameter value	Meaning
18	RELE 1	VYPNUTO	Function of Relay 1
		POL.OTEVRENO	
		POL. ZAVRENO	
		MOM.OTEVRENO	
		MOM. ZAVRENO	
		POL.O.+MOM.O	
		POL.Z.+MOM.Z	
		OTEVIRA	
		ZAVIRA	
		POHYB	
		POLOHA	
		POL. N.	
		OVL. MISTNI	
		OVL. DALKOVE	
		OVL. VYPNUTO	
		MOMENT O/Z	
		POHYB-BLIKAC	
19	RELE 2	same as RELE 1	Function of Relay 2
20	RELE 3	same as RELE 1	Function of Relay 3
21	RELE 4	same as RELE 1	Function of Relay 4
22	INFORMACE	SNIMAC	Information on the system
		DISP I	
		DISP E	
		DISP ED	
		FLDBUS	
		CHYBA 1	
		CHYBA 2	
		CHYBA 3	
		MOMENT	
		TEPLOTA	
23	ZALOHA PAR	OBNOVIT PAR VYTVORIT ZAL	Creation of backup parameters, restoring from backup parameters
24	ADRESA	1 – 125	Address of actuator on industrial bus
25	TAKT MOD	VYPNUTO	Mode of cycle regime
		SMER O	
		SMER Z	
		SMĚR O+Z	
26	TAKT BEH	1 – 250 s	Time of motor run down in cycle regime
27	TAKT PAUSA	1 – 250 s	Time of motor pause in cycle regime

Setting actuator by means of push-buttons:

– Shift the change-over switch of local control to position OFF
– Keep pressing push-button STOP to enter the MENU. Using push-buttons O or Z, browse through the MENU *(MENU1 – MENU27).* Shortly press push-button STOP in a selected menu to enter this menu and, using push-buttons O or Z, select the parameter. Keep pressing push-button STOP to store the parameter to memory. Shortly press push-button STOP to exit the setting of parameters and proceed with browsing through another menu.

Keep pressing push-button STOP to exit the set menu; or keep pressing push-button STOP in the item END after the last MENU 27 to terminate the setting regime.

Setting end-limit positions by means of push-buttons of local control

Shift the change-over switch LOCAL – REMOTE to position OFF. Keep pressing push-button STOP to enter the setting regime. Using push-button “Z”, choose MENU2. Shortly press push-button STOP to select setting of position “O”. Shift the change-over switch to position “LOCAL” and start the actuator. After the required position is reached, shift the switch to position “OFF” and keep pressing of push-button “STOP” to store the position to memory.

Shortly press push-button “Z” to select setting of position “Z”. Shift the change-over switch again to position “LOCAL” and start the actuator in direction “Z”. After the required position is reached, shift the switch to position “OFF” and keep pressing push-button “STOP” to store the position to memory.

Shortly press push-button “STOP” to exit MENU 2. Keep pressing push-button “STOP” to exit the setting regime.

Change over the local control to position OFF, enter the menu *(by long pressing of push-button STOP),* and change over to position “LOCAL”; the actuator can now be shifted by means of push-buttons “O” and “Z” beyond the set end--limit positions. In this case, the actuator will trip after the set tripping torque is reached.

Autocalibration

In the setting regime choose MENU 3. Shortly press push-button “STOP” to enter MENU 3 and keep pressing push-button “STOP” to start autocalibration. By short starting of the motor in both directions, the actuator will measure inertia. Completion of the autocalibration is announced by the message AUTOCALIBRATION OK.

Shortly press push-button “STOP” to return to MENU 3 and keep pressing of push-button “STOP” to exit the setting regime.

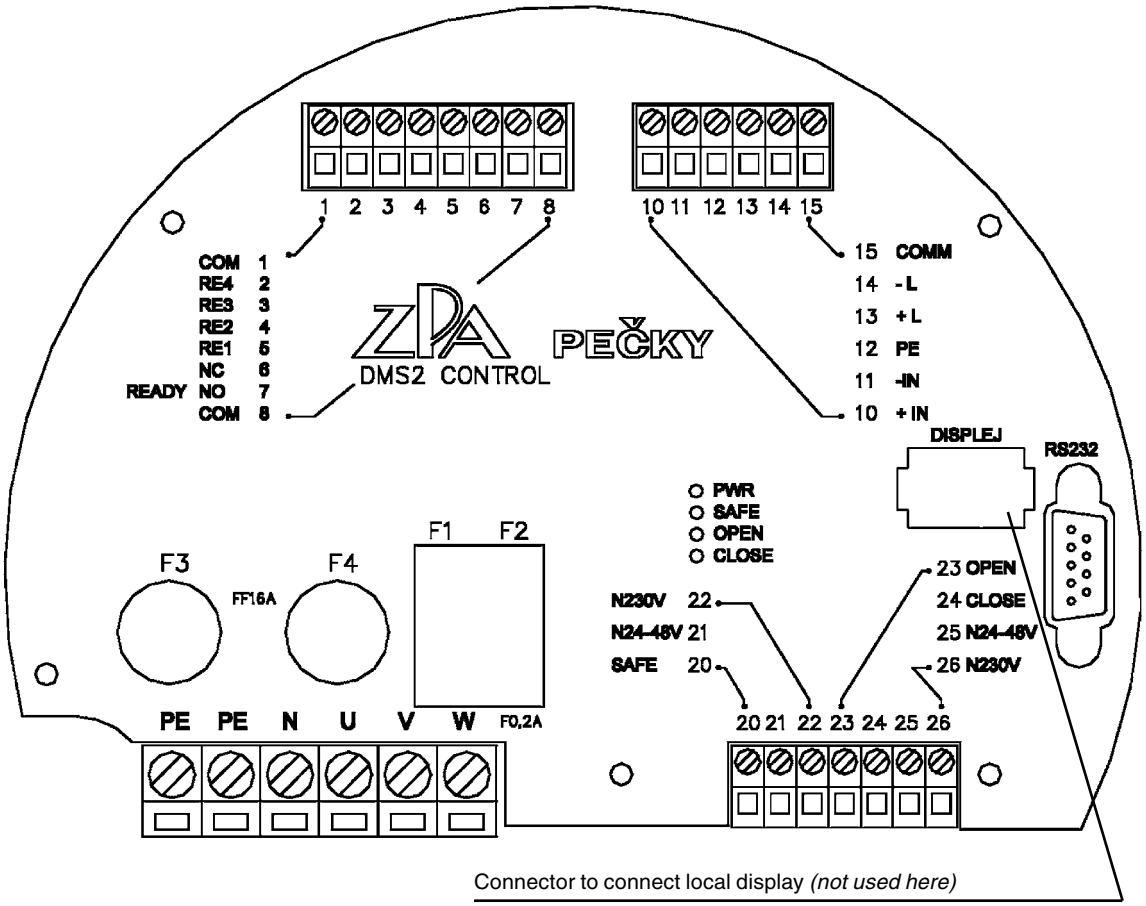

Terminal board of DMS2 Analog

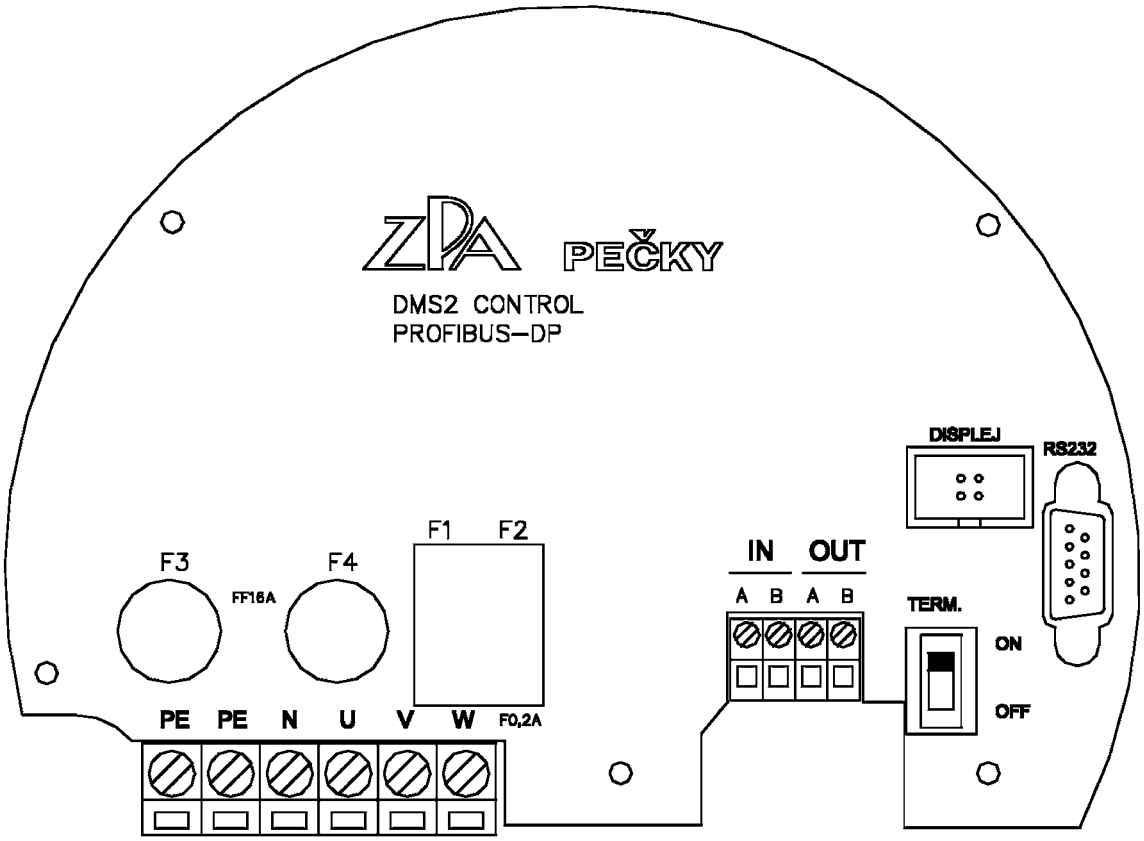

Terminal board of DMS2 Profibus

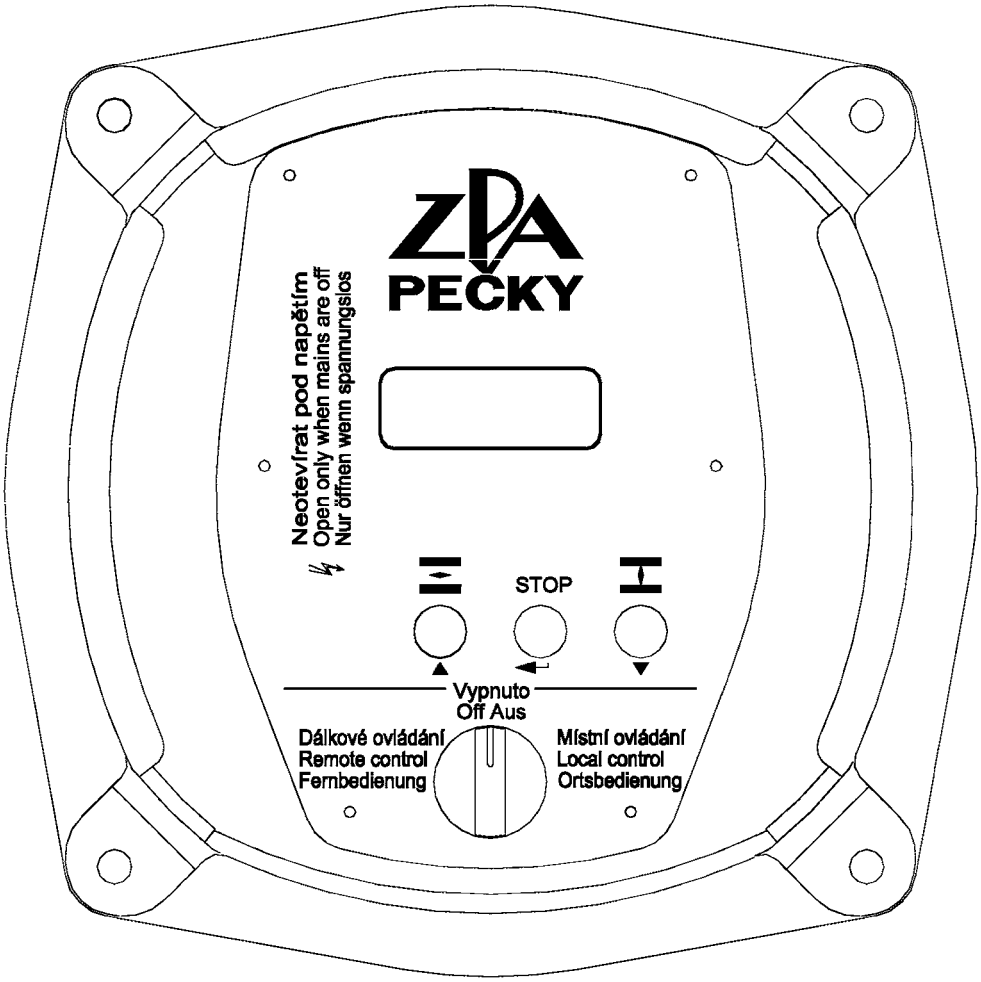

DMS2 - local control and display

Note:

The setting program enables data to be copied from the memory of parameters of the electronics DMS2 and DMS2ED into the computer as a file with suffix "par" (in the example in the figure the file 52 030.par is created in the directory Flash). The file can serve as a back-up for the case that it will be necessary to replace the position sensor in the given actuator and to set it in the same way as the replaced one; or it can be sent as an enclosure to e-mail to the manufacturing or service firm in solving possible problems..

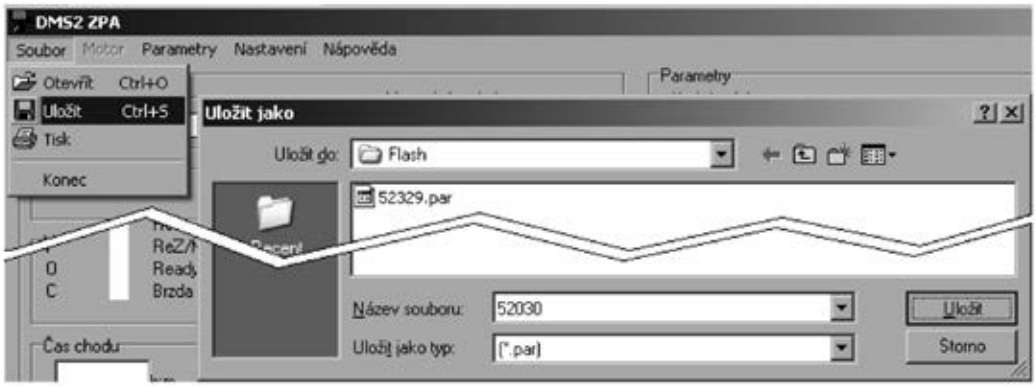

Example of wiring diagram of electronics **DMS2 Analog** in version **Control** ***(actuators MODACT MONED, MOPED)***

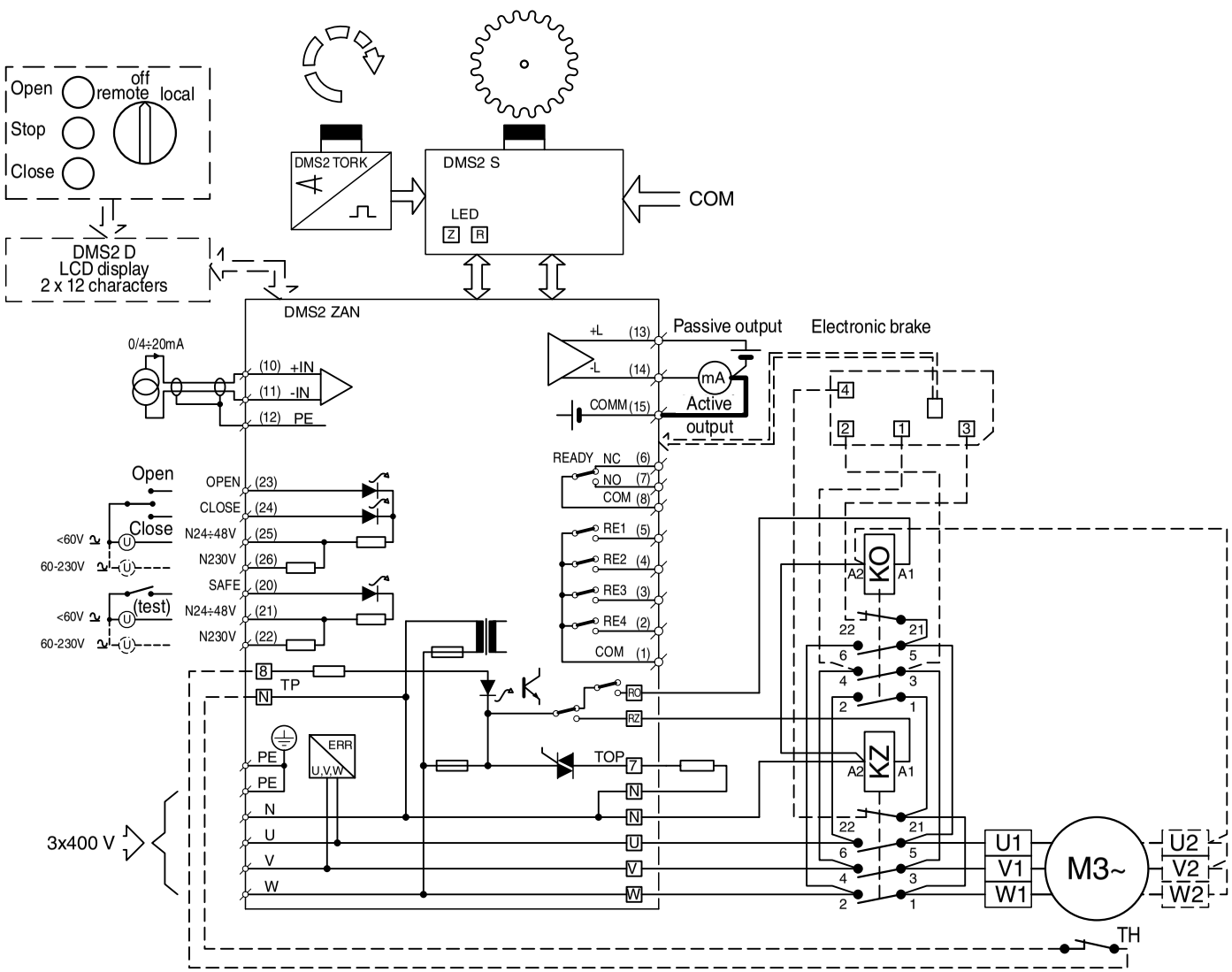

Example of wiring diagram of electronics **DMS2 Analog** in version **Control** with connector connection
(actuators MODACT MONED, MOPED)

E0032K

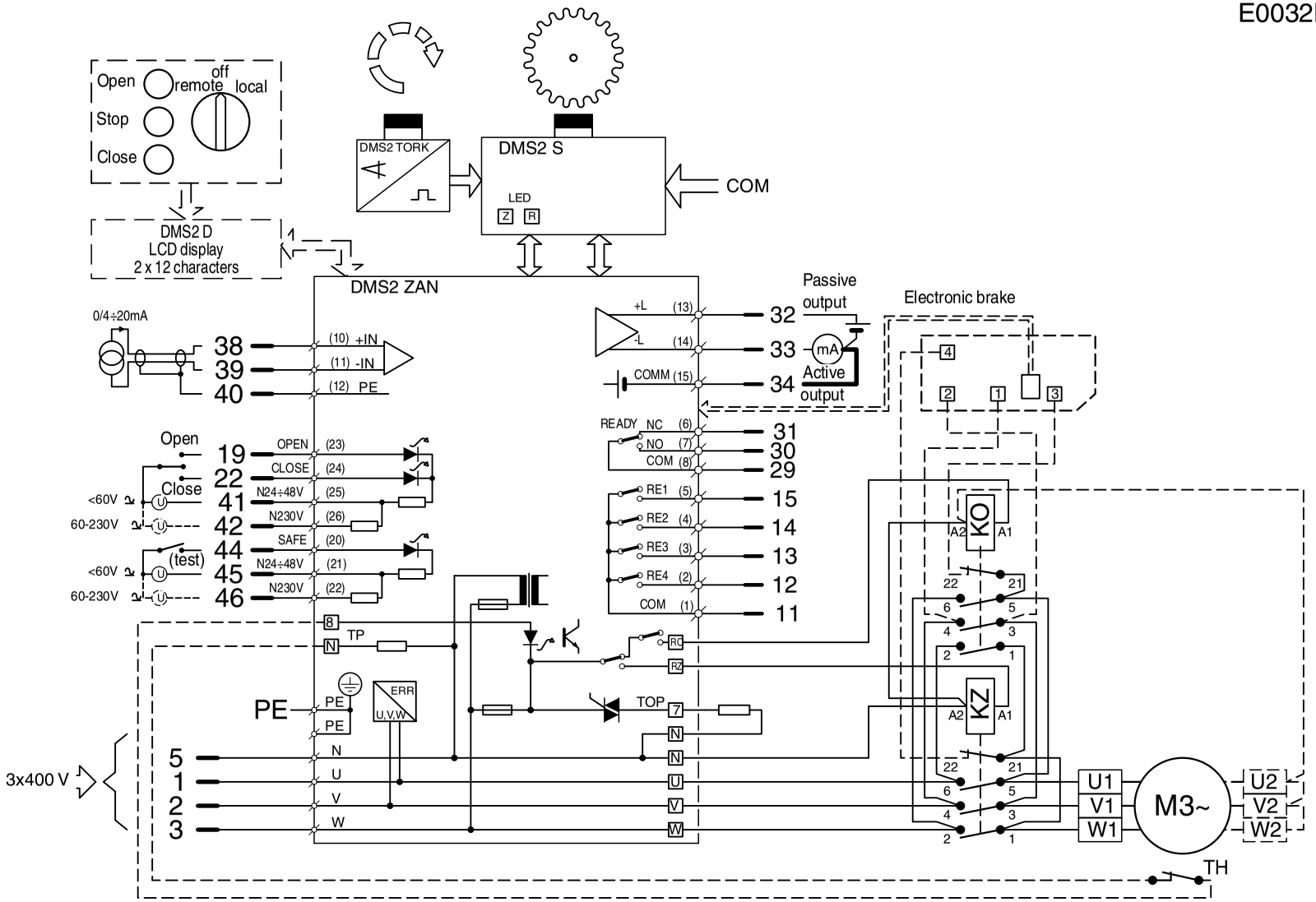

Example of wiring diagram of electronics **DMS2 Analog** with contact-less switching of electric motor
(actuators MODACT MONED, MOPED)

E0031

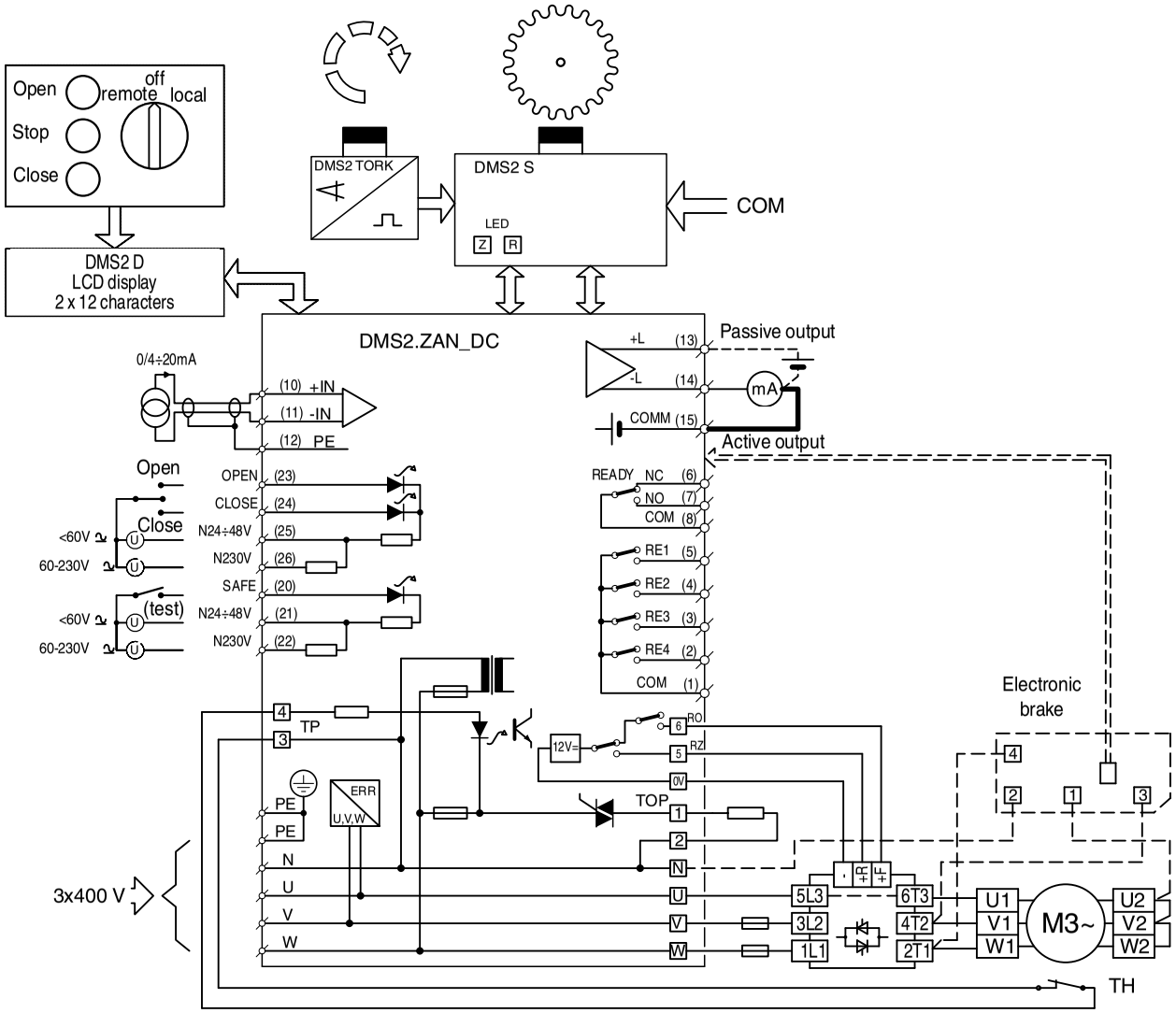

Example of wiring diagram of electronics **DMS2 Analog *(actuators MODACT MONEDJ)***

E0007

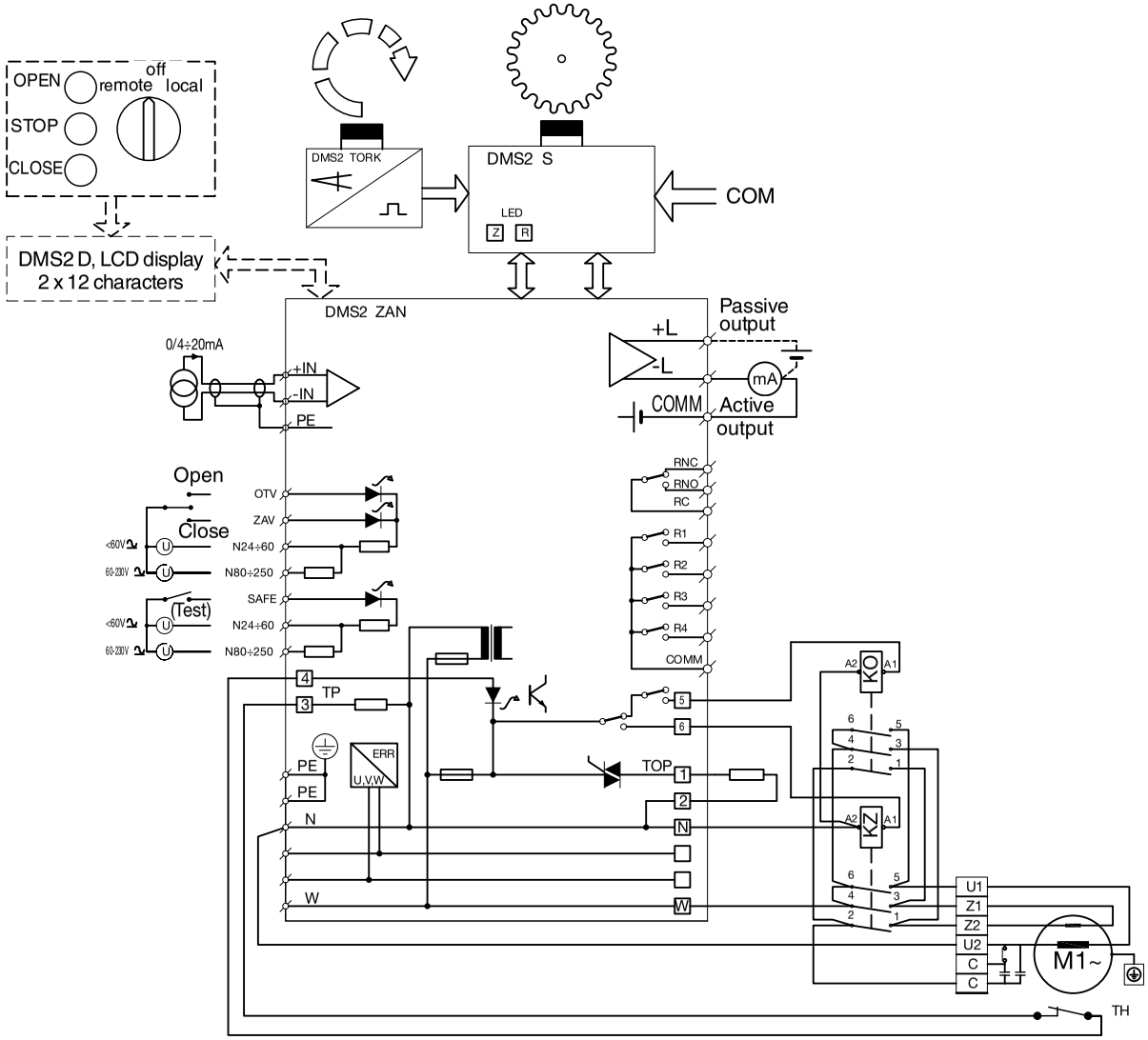

Example of wiring diagram of electronics **DMS2 Profibus** ***(actuators MODACT MONED, MOPED)***

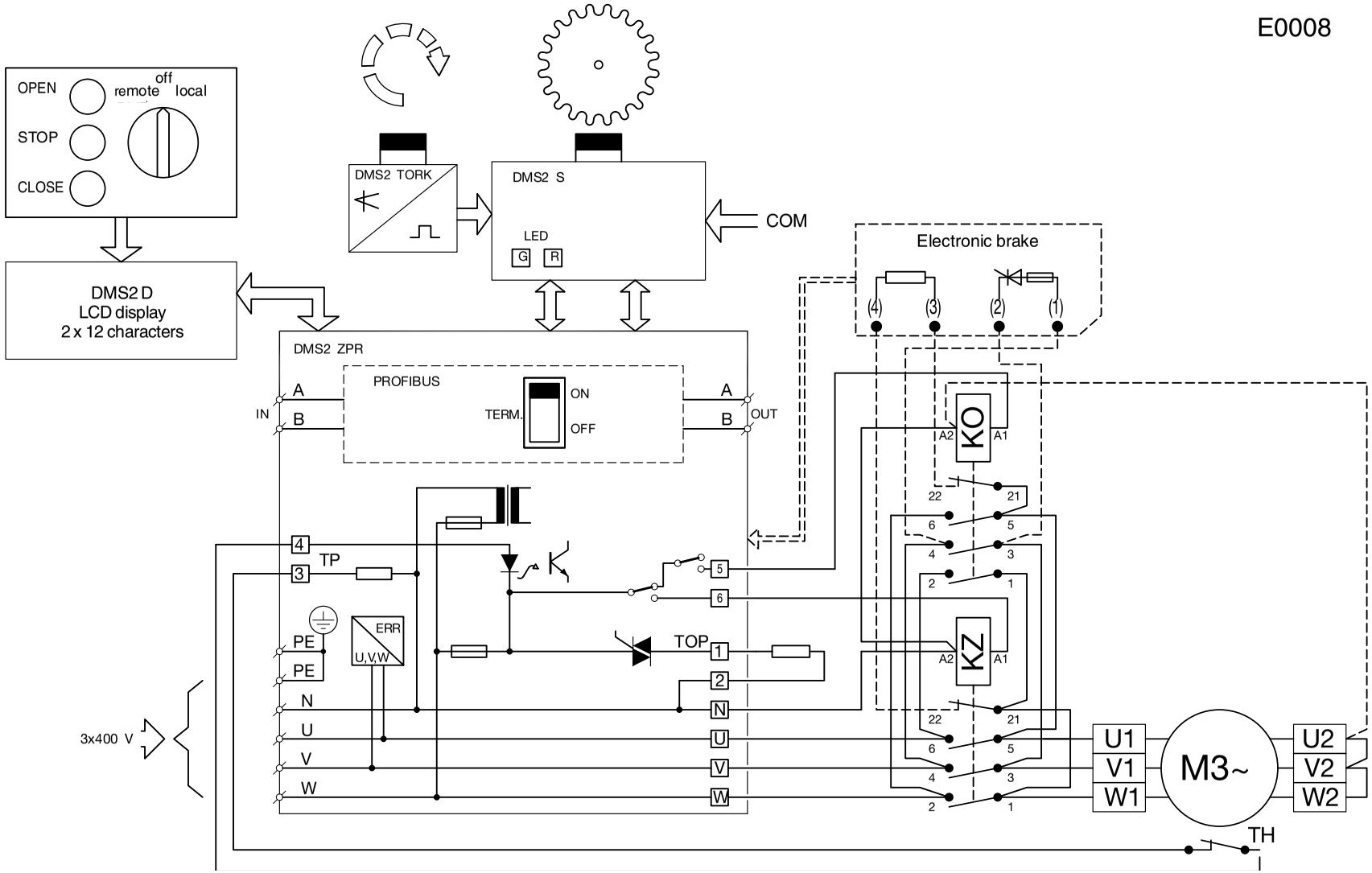

Example of wiring diagram of electronics **DMS2 Profibus** with contact-less switching of electric motor
(actuators MODACT MONED, MOPED)

E0033

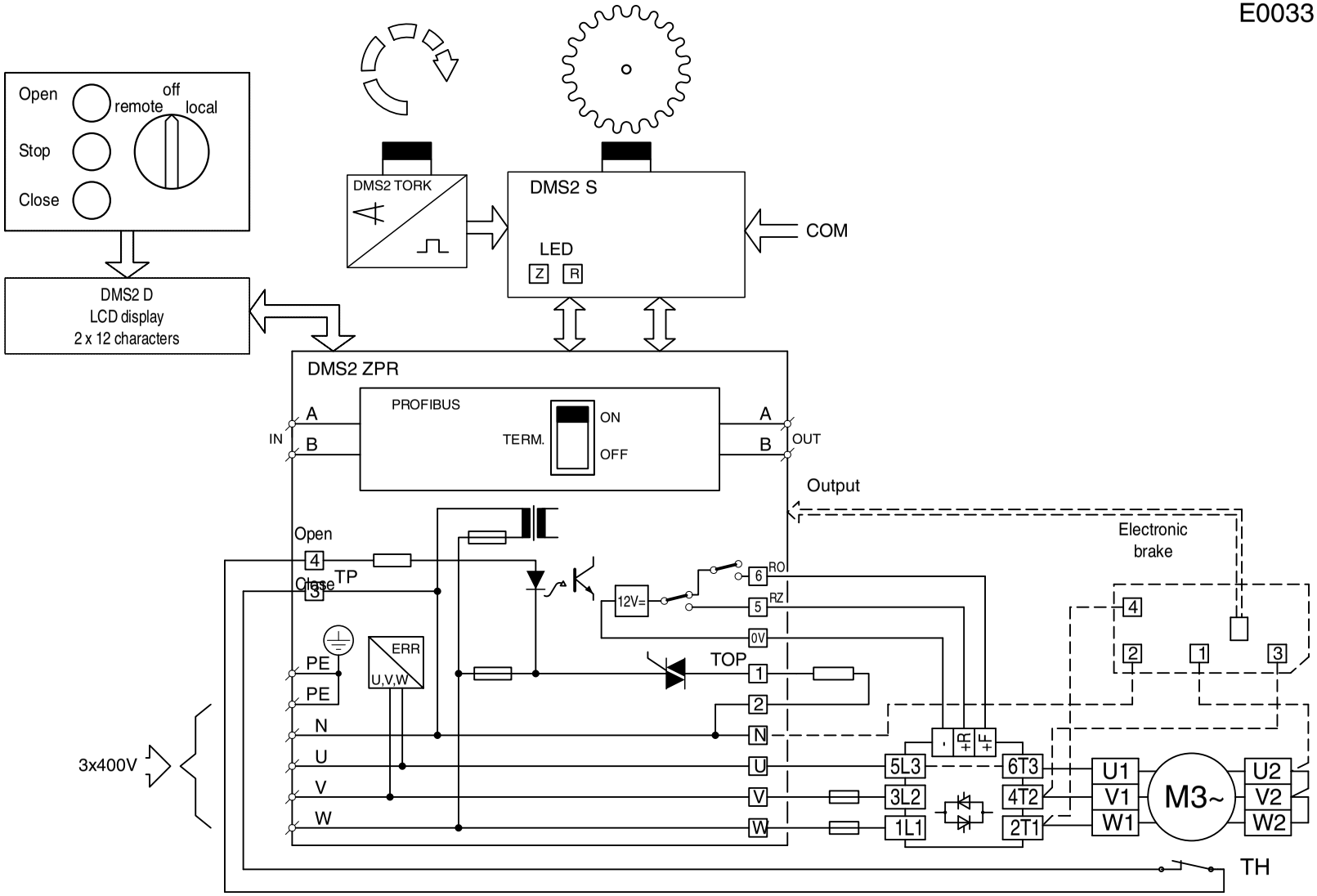

Example of wiring diagram of electronics **DMS2 Profibus** in version **Control** ***(actuators MODACT MONEDJ)***

E0009

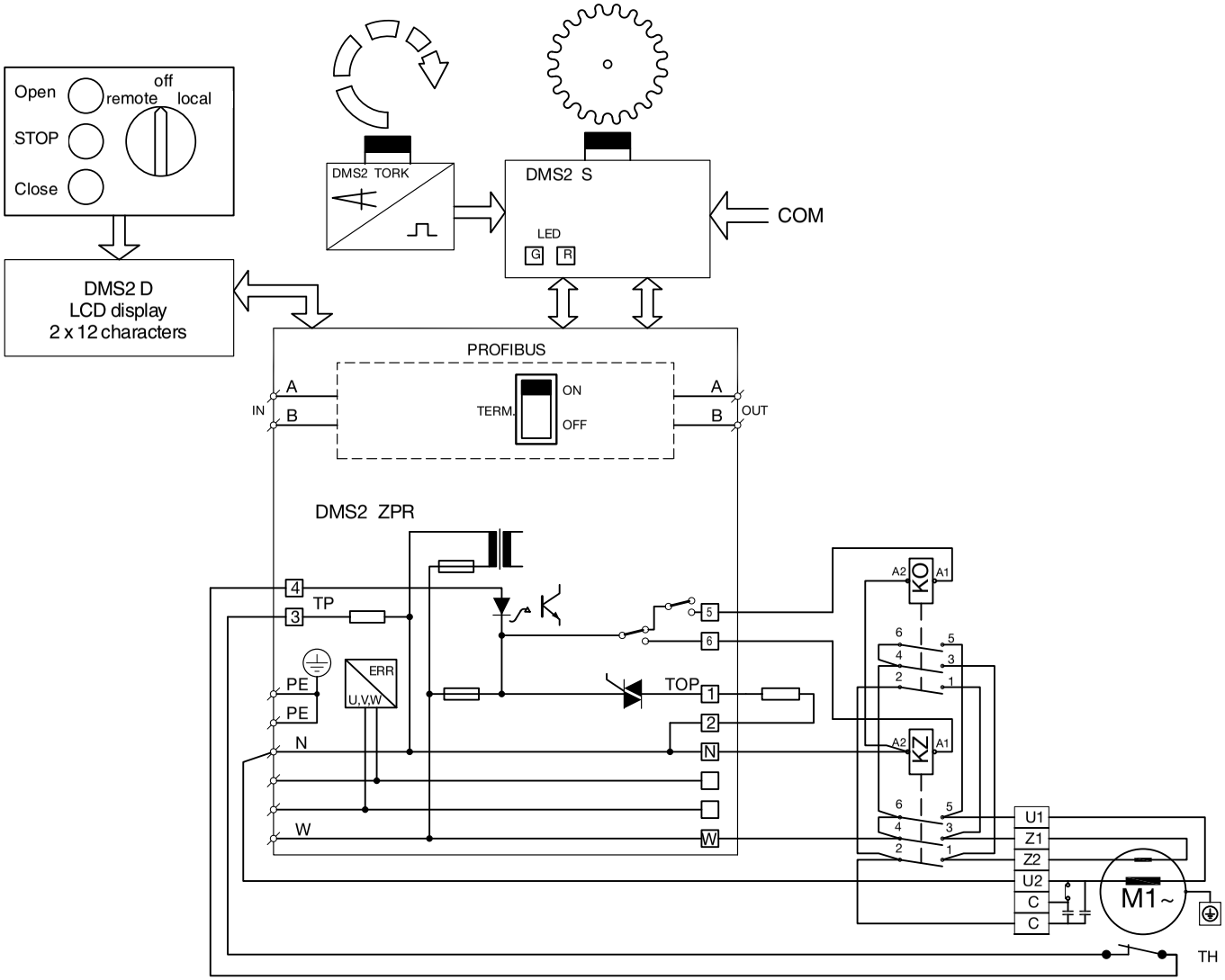

Table 1 – Electric actuators MODACT MONED, MOPED – basic parameters

With 1TZ9002 *(1LE1002)* electric motors – supply voltage 3 x 230/400 V, 50 Hz, protection IP 55 *(MODACT MONED)*, IP 67 *(MODACT MOPED)*

Type marking	Moment [Nm]		Adjusting speed [1/min]	Working stroke [revol.]	Type of lubricant	Electric motor					Weight [kg]	Type No.	
	Tripping	Starting				Type	Power [kW]	RPM [1/min]	I_n (400 V) [A]	$\frac{I_Z}{I}$		basic 1 2 3 4 5	additional 6 7 8 9 10
MONED (MOPED) 40/135-7	20 – 40	135	7	2 – 1980		1TZ9002-0CD2	0,09	635	0,53	1,8	28	52030 connecting dimension F10	x x V x N(P)ED
MONED (MOPED) 40/220-9		220	9			1TZ9002-0CC2	0,18	875	0,85	2,0	26		x x 0 x N(P)ED
MONED (MOPED) 40/135-15		135	15			1TZ9002-0CC2	0,18	875	0,85	2,0	26		x x 1 x N(P)ED
MONED (MOPED) 40/100-25		100	25			1TZ9002-0CB2	0,25	1365	0,80	3,0	24		x x 2 x N(P)ED
MONED (MOPED) 40/60-40		60	40			1TZ9002-0CB2	0,25	1365	0,80	3,0	24		x x 3 x N(P)ED
MONED (MOPED) 40/95-50		95	50		♦	1TZ9002-0CA2	0,37	2755	1,06	3,4	26		x x 4 x N(P)ED
MONED (MOPED) 40/60-80		60	80		♦	1TZ9002-0CA2	0,37	2755	1,06	3,4	26		x x 5 x N(P)ED
MONED (MOPED) 80/135-7	40 – 80	135	7			1TZ9002-0CD2	0,09	635	0,53	1,8	28		x x k x N(P)ED
MONED (MOPED) 80/220-9		220	9			1TZ9002-0CC2	0,18	875	0,85	2,0	26		x x 6 x N(P)ED
MONED (MOPED) 80/135-15		135	15			1TZ9002-0CC2	0,18	875	0,85	2,0	26		x x 7 x N(P)ED
MONED (MOPED) 80/100-25		100	25			1TZ9002-0CB2	0,25	1365	0,80	3,0	24		x x 8 x N(P)ED
MONED (MOPED) 80/104-40		104	40			1TZ9002-0CB3	0,37	1350	1,08	3,2	26		x x 9 x N(P)ED
MONED (MOPED) 70/95-50	40 – 70	95	50		♦	1TZ9002-0CA2	0,37	2755	1,06	3,4	26		x x A x N(P)ED
MONED (MOPED) 70/90-80		90	80		♦	1TZ9002-0CA3	0,55	2750	1,46	3,7	25		x x B x N(P)ED
MONED (MOPED) 125/160-7	80 – 125	160	7			1TZ9002-0CD3	0,12	625	0,82	2,0	26		x x L x N(P)ED
MONED (MOPED) 125/220-9		220	9			1TZ9002-0CC2	0,18	875	0,85	2,0	26		x x C x N(P)ED
MONED (MOEDP)125/170-15		170	15			1TZ9002-0CC3	0,25	860	0,98	2,2	25		x x D x N(P)ED
MONED (MOPED) 125/165-25		165	25			1TZ9002-0CB3	0,37	1350	1,08	3,2	26		x x E x N(P)ED
MONED (MOPED) 115/150-50	80 – 115	150	50		♦	1TZ9002-0CA3	0,55	2750	1,46	3,7	25		x x H x N(P)ED
MONED (MOPED) 200/280-9	100 – 200	280	9			1TZ9002-0CC3	0,25	860	0,98	2,2	25		x x R x N(P)ED
MONED (MOPED) 200/270-15		270	15			1TZ9002-0CB3	0,37	1350	1,08	3,2	26		x x S x N(P)ED
MONED (MOPED) 200/300-25		300	25			1TZ9002-0CB6	0,55	1365	1,62	3,6	27		x x T x N(P)ED
MONED (MOPED) 140/180-50	100 – 140	180	50		♦	1TZ9002-0CA6	0,75	2780	1.81	4,5	26		x x U x N(P)ED
MONED (MOPED) 95/125-7	63 – 95	125	7	2 – 1400		1TZ9002-0CD2	0,09	635	0,53	1,8	49	52031 connecting dimension F14	x x C x N(P)ED
MONED (MOPED) 100/210-9	63 – 100	210	9			1TZ9002-0CC2	0,18	875	0,85	2,0	49		x x 0 x N(P)ED
MONED (MOPED) 100/185-15		185	15			1TZ9002-0CC3	0,25	860	0,98	2,2	49		x x 1 x N(P)ED
MONED (MOPED) 100/130-25		130	25			1TZ9002-0DC2	0,37	915	1,23	2,7	41		x x 2 x N(P)ED
MONED (MOPED) 100/165-40		165	40			1TZ9002-0DB2	0,55	1385	1,44	3,7	41		x x 3 x N(P)ED
MONED (MOPED) 100/140-63		140	63		♦	1TZ9002-0DB3	0,75	1385	1,85	3,6	42		x x 4 x N(P)ED
MONED (MOPED) 100/200-80		200	80		♦	1TZ9002-0DA3	1,1	2840	2,45	5,7	43		x x E x N(P)ED
MONED (MOPED)100/140-100		140	100		♦	1TZ9002-0EB0	1,1	1405	2,5	4,5	50		x x 5 x N(P)ED
MONED (MOPED)100/165-145		165	145		♦	1TZ9002-0EA0	1,5	2835	3,3	5,5	51		x x F x N(P)ED
MONED (MOPED) 125/160-7	100 – 125	160	7			1TZ9002-0CD3	0,12	625	0,82	2,0	49		x x D x N(P)ED
MONED (MOPED) 160/210-9	100 – 160	210	9			1TZ9002-0CC2	0,18	875	0,85	2,0	49		x x 6 x N(P)ED
MONED (MOPED) 150/200-16		200	16			1TZ9002-0DC2	0,37	915	1,23	2,7	50		x x 7 x N(P)ED
MONED (MOPED) 160/208-25		208	25			1TZ9002-0DC3	0,55	900	1,68	2,7	42		x x 8 x N(P)ED
MONED (MOPED) 160/225-40		225	40			1TZ9002-0DB3	075	1385	1,85	3,6	42		x x 9 x N(P)ED
MONED(MOPED) 160/330-65		330	65		♦	1TZ9002-0EB4	1,5	1410	3,35	4,7	54		x x A x N(P)ED
MONED (MOPED) 160/275-80		275	80		♦	1TZ9002-0EA0	1,5	2835	3,3	5,5	46		x x H x N(P)ED
MONED (MOPED)160/215-100		215	100		♦	1TZ9002-0EB4	1,5	1410	3,35	4,7	54		x x B x N(P)ED
MONED (MOPED)160/280-130		280	130		♦	1TZ9002-0EA4	2,2	2855	4,7	6,5	54		x x J x N(P)ED

MONED (MOPED) 245/340-7	160 – 245	340	7			1TZ9002-0DD3	0,25	680	1,03	2,6	52		x x 6 x N(P)ED
MONED (MOPED) 230/300-9	160 – 230	300	9			1TZ9002-0DC2	0,37	915	1,23	2,7	50		x x 0 x N(P)ED
MONED (MOPED) 230/300-16		300	16			1TZ9002-0DC3	0,55	900	1,68	2,7	52		x x 1 x N(P)ED
MONED (MOPED) 250/325-25	160 – 250	325	25			1TZ9002-0EC0	0,75	940	2,3	3,8	45		x x 2 x N(P)ED
MONED (MOPED) 250/325-40		325	40			1TZ9002-0EB0	1,1	1405	2,5	4,5	45		x x 3 x N(P)ED
MONED (MOPED) 230/300-70	160 – 230	300	70		♦	1TZ9002-0EB4	1,5	1410	3,35	4,7	54		x x 4 x N(P)ED
MONED (MOPED) 250/420-80	160 – 250	420	80		♦	1TZ9002-0EA4	2,2	2855	4,7	6,5	49		x x 5 x N(P)ED
MONED (MOPED)200/260-145	160 – 200	260	145	2 – 1400	♦	1TZ9002-0EA4	2,2	2855	4,7	6,5	49	52032	x x 7 x N(P)ED
MONED (MOPED) 400/640-7	230 – 400	640	7			1TZ9002-0ED4	0,55	675	1,58	3,0	55	connecting dimension	x x E x N(P)ED
MONED (MOPED) 370/480-10	230 – 370	480	10			1TZ9002-0DC3	0,55	900	1,68	2,7	53	F14	x x F x N(P)ED
MONED (MOPED) 400/740-16		740	16			1TZ9002-0EC4	1,1	925	3,15	3,8	55		x x H x N(P)ED
MONED (MOPED) 400/520-25	230 – 400	520	25			1TZ9002-0EC4	1,1	925	3,15	3,8	48		x x J x N(P)ED
MONED (MOPED) 400/510-40		510	40			1TZ9002-0EB4	1,5	1410	3,35	4,7	48		x x K x N(P)ED
MONED (MOPED) 400/520-70		520	70		♦	1TZ9001-0EB6	2,2	1425	4,65	6,1	49		x x L x N(P)ED
MONED (MOPED) 320/420-140	230 – 320	420	140		♦	1TZ9001-0EA6	3,0	2895	6,0	7,9	49		x x M x N(P)ED
MONED (MOPED) 500/800-16	250 – 500	800	16			1TZ9002-1BD2	1,5	700	4,7	3,5	97		x x 0 x N(P)ED
MONED (MOPED) 470/610-25	250 – 470	610	25			1TZ9002-0EC4	1,1	925	3,15	3,8	90	52033	x x 1 x N(P)ED
MONED (MOPED) 500/720-40		720	40			1TZ9002-1BC2	2,2	940	5,7	4,6	93	connecting dimension	x x 2 x N(P)ED
MONED (MOPED) 500/670-63	250 – 500	670	63		♦	1TZ9002-1AB5	3,0	1425	6,3	5,4	90	F16	x x 3 x N(P)ED
MONED (MOPED) 500/770-100		770	100		♦	1TZ9002-1AB6	4,0	1435	8,6	5,8	97		x x 4 x N(P)ED
MONED (MOPED) 630/900-16		900	16			1TZ9002-1BD2	1,5	700	4,7	3,5	99		x x 0 x N(P)ED
MONED (MOPED) 630/1300-22	320 – 630	1300	22			1TZ9002-1BC2	2,2	940	5,7	4,6	103		x x 1 x N(P)ED
MONED (MOPED) 630/830-35		830	35			1TZ9002-1AB4	2,2	1425	4,9	5,1	97	52034	x x 2 x N(P)ED
MONED (MOPED) 630/900-63		900	63	2 – 1080	♦	1TZ9002-1BB2	4,0	1435	8,4	6,1	97	connecting dimension	x x 3 x N(P)ED
MONED (MOPED) 1000/1300-22		1300	22			1TZ9002-1BC2	2,2	940	5,7	4,6	102	F16	x x 6 x N(P)ED
MONED (MOPED) 1000/1400-35	500 – 1000	1400	35			1TZ9002-1BB2	4,0	1435	8,4	6,1	105		x x 7 x N(P)ED
MONED (MOPED) 1000/1500-63		1500	63		♦	1TZ9002-1BB6	5,5	1420	11,6	5,8	109		x x 9 x N(P)ED
MONED (MOPED) 1250/1780-45	630 – 1250	1780	45		♦	1TZ9002-1CC3	5,5	955	12,7	5,7	211		x x 0 x N(P)ED
MONED (MOPED) 1250/1650-70		1650	70		♦	1TZ9002-1CB2	7,5	1450	15,4	6,6	206	52035	x x 1 x N(P)ED
MONED (MOPED) 900/1170-100	630 – 900	1170	100		♦	1TZ9002-1CB2	7,5	1450	15,4	6,6	206	connecting dimension	x x 2 x N(P)ED
MONED (MOPED) 1800/2400-70	1000 – 1800	2400	70		♦	1TZ9002-1CB6	11	1450	21,5	7,2	217	F25	x x 3 x N(P)ED
MONED (MOPED)1250/1650-100	630 – 1250	1650	100		♦	1TZ9002-1CB6	11	1450	21,5	7,2	217		x x 4 x N(P)ED
MONED (MOPED) 2500/3850-20	1000 – 2500	3850	20		♦	1TZ9002-1CC3	5,5	955	12,7	5,7	309		x x 0 x N(P)ED
MONED (MOPED) 2500/3600-30		3600	30		♦	1TZ9002-1CB2	7,5	1450	15,4	6,6	304	52036	x x 1 x N(P)ED
MONED (MOPED) 2000/2600-40	1000 – 2000	2600	40	2 – 460	♦	1TZ9002-1CB2	7,5	1450	15,4	6,6	304	connecting dimension	x x 2 x N(P)ED
MONED (MOPED) 3900/5100-30	2000 – 3900	5100	30		♦	1TZ9002-1CB6	11	1450	21,5	7,2	315	F30	x x 3 x N(P)ED
MONED (MOPED) 2800/3600-40	1600 – 2800	3600	40		♦	1TZ9002-1CB6	11	1450	21,5	7,2	315		x x 4 x N(P)ED

Note:

1) The rated torque is 60 % of the maximum tripping torque for duty S2 and 40 % of the maximum tripping torque for duty S4.

2) The weight data apply to the version with connecting dimensions C, D, E.

3) The table shows the type of electric motors according to MEZ ie 1TZ9. On delivery the type of electric motor may also be marked according to SIEMENS, ie 1LE1. Other marking symbols are then identical.

4) ♦ – Mark of actuators filled with oil. Other actuators are filled with plastic lubricant.

Table 2 – Electric actuators MODACT MONEDJ – basic parameters – supply voltage 1 x 230 V, 50 Hz, protective enclosure IP 55

Type marking	Control	Torque [Nm] Tripping	Torque [Nm] Starting	Adjusting speed [1/min]	Working stroke [revol.]	Typ maziva	Electric motor: Type of el. motor	Power [kW]	RPM [1/min]	I_n (230 V) [A]	I_Z / I_n	Weight [kg]	Type No. basic (1 2 3 4 5)	Type No. additional (6 7 8 9 10 11)
MONEDJ 40/75-25	C	20 – 40	75	25	2-1980		JMO 71-4S	0,25	1400	1,89	3,4	27	52 030 connecting dimension F10	x x 2 x NEDJ x
MONEDJ 40/50-40	C		50	40			JMO 71-4S	0,25	1400	1,89	3,4	27		x x 3 x NEDJ x
MONEDJ 40/60-50	C		60	50		♦	JMO 71-2S	0,37	2880	2,53	3,9	27		x x 4 x NEDJ x
MONEDJ 40/60-80	C		60	80		♦	JMO 71-2M	0,55	2860	3,41	4,0	27		x x 5 x NEDJ x
MONEDJ 80/135-25	C	40 – 80	135	25			JMO 71-4M	0,37	1400	2,61	3,4	27		x x 8 x NEDJ x
MONEDJ 70/90-40	C	40 – 70	90	40			JMO 71-4M	0,37	1400	2,61	3,4	28		x x 9 x NEDJ x
MONEDJ 75/100-50	C	40 – 75	100	50		♦	JMO 71-2M	0,55	2860	3,41	4,0	28		x x A x NEDJ x
MONEDJ 110/143-25	C	80 – 110	143	25			JMO 71-4M	0,37	1400	2,61	3,4	28		x x E x NEDJ x
MONEDJ 100/130-40	C	63 – 100	130	40	2-1400		JMO 80-4S	0,55	1395	3,85	3,8	41	52 031 connecting dimension F14	x x 3 x NEDJ x
MONEDJ 95/124-63		63 – 95	124	63		♦	JMO 80-4M	0,75	1400	4,7	4,0	42		x x 4 x NEDJ x
MONEDJ 100/130-80		63 – 100	130	80		♦	JMO 80-2M	1,1	2800	6,6	4,4	43		x x E x NEDJ x
MONEDJ 100/130-100			130	100		♦	JMO 90-4L	1,5	1400	8,68	3,5	50		x x 5 x NEDJ x
MONEDJ 95/124-145		63 – 95	124	145		♦	JMO 90-2S	1,5	2830	9,11	4,5	51		x x F x NEDJ x
MONEDJ 150/195-40		100 – 150	195	40			JMO 80-4M	0,75	1400	4,7	4,0	41		x x 9 x NEDJ x
MONEDJ 160/208-65		100 – 160	208	65		♦	JMO 90-4L	1,5	1400	8,68	3,5	42		x x A x NEDJ x
MONEDJ 160/208-80				80		♦	JMO 90-2S	1,5	2830	9,11	4,5	43		x x H x NEDJ x
MONEDJ 130/170-145		100 – 130	170	145		♦	JMO 90-2L	2,2	2850	13,02	4,8	51		x x J x NEDJ x
MONEDJ 250/325-40		160 – 250	325	40			JMO 90-4L	1,5	1400	8,68	3,5	45	52 032 connec. dim. F14	x x 3 x NEDJ x
MONEDJ 220/286-80		160 – 220	286	80		♦	JMO 90-2L	2,2	2850	13,02	4,8	49		x x 5 x NEDJ x

The actuators MODACT MONEDJ are fitted with single-phase electric motors Siemens series 1LF7... with running and starting-up capacitors. The manufacturer guarantees 60,000 and 100,000 start-ups for two-pole electric motors (ca 2800 r.p.m.) and four-pole electric motors (ca 1400 r.p.m.), respectively. Then, it is necessary to replace the centrifugal disconnector of the starting-up capacitor – it is available at ZPA Pečky a.s.

In ZPA Pečky a.s., electric motors of power up to 0.37 kW are fitted with a triac disconnector that extends the service life to 350,000 start-ups.

If the actuator with a single-phase electric motor is to be used for regulating purposes, it is necessary to take this fact into consideration in setting-up the regulation process (frequency of regulating interventions).

The expected working regime of the actuators MONEDJ should be discussed with the marketing department of ZPA Pečky, a.s.

♦ – Mark of actuators filled with oil. Other actuators are filled with plastic lubricant.

Electric actuators MODACT MONED, MOPED, MONEDJ

– Specification of meaning of the 6th to 10th place of the type number

Place in the type number...	1st	2nd	3rd	4th	5th	6th	7th	8th	9th	10th	11th
Type number.....	**5**	**2**	**0**	**3**	**x**	**. x**	**x**	**x**	**x**	**x E D (J)**	**x**

6th place of type number

Table 3

Connecting dimensions	Version: Bushings	Version: Connector
Shape A	5	F
Shape B1	6	G
Shape C	7	H
Shape D	8	J
Shape E	9	K

7th place of type number

If one of numerals 1, 3, 5, 7 or 9 is on the 9th place of the type number the character from Table 4 is on the 7th place.
If one of numerals 2, 4, 6 or 8 is on the 9th place of the type number the character from Table 5 is on the 7th place.

Table 4 – actuator fitted with electronics DMS2 ED

Outfit		0	1	2	3	4	5	6	7	8	9	A	B	C	D	E	F	H	J	K	L	M	N	V	W
Local control			x		x		x		x		x		x		x		x		x		x		x		x
Display				x	x			x	x			x	x			x	x			x	x			x	x
Contactors or contact-less switching						x	x	x	x					x	x	x	x					x	x	x	x
Analog module	transmitter									x	x	x	x	x	x	x	x	x	x	x	x	x	x	x	x
	regulator																	x	x	x	x	x	x	x	x

Place in the type number...	1st	2nd	3rd	4th	5th	6th	7th	8th	9th	10th	11th
Type number.....	**5**	**2**	**0**	**3**	**x**	**. x**	**x**	**x**	**x**	**x x D (J)**	**x**

7th place of type number

Table 5 – actuator fitted with electronics DMS2

Two-position or three-position control *) – DMS2	**R**
Profibus – DMS2	**P**
Two- or three-position control, without display and local control *) – DMS	**T**
Modbus	**Y**

**) Two- or three-position regulation of the actuator is set at the manufacturer. Unless otherwise specified in the order, the actuator will be set for three-position regulation (control by signal 4 – 20 mA).*

8th place of type number

Tripping torque, shifting speed	MODACT MONED, MOPED	– Table 1
	MODACT MONEDJ	– Table 2

9th place of type number

Table 6 – type of electronics, power switches, brake

Electronics DMS2 ED	– without power switches	**1**
Electronics DMS2	– with contactors	**2**
Electronics DMS2 ED	– with contact-less switches	**3**
Electronics DMS2	– with contact-less switches	**4**
Electronics DMS2 ED	– with contactors and brake *)	**5**
Electronics DMS2	– with contactors and brake	**6**
Electronics DMS2 ED	– with contact-less switches and brake *)	**7**
Electronics DMS2	– with contact-less switches and brake	**8**
Electronics DMS2 ED	– with contactors	**9**

Note: *Version 52 03x.xxxxNEDJ is delivered in version 52 03x.xxx1NEDJ, 52 03x.xxx2NEDJ or 52 03x.xxx9NEDJ.*

**) If the actuator has DMS2 ED electronic system in configuration Electromechanics board replacement, the electronic brake will not be delivered.*

10th place of type number

Protective enclosure: MONED, MONEDJ – **IP 55;** MOPED – **IP 67**

11th place of type number

Table 7 – Surrounding temperatures

Type of actuator						Temperature [°C]	Označení
MONED		MOPED		MONEDJ			
DMS2 ED	DMS2	DMS2 ED	DMS2	DMS2 ED	DMS2		
✓	✓	✓	✓	×	×	-25 +60	–
✓	✓	✓	✓	×	×	-40 +60	F1
✓	✓	×	×	✓	✓	-25 +70	–

Note: ✓ – *available version*
× – *not available*
Relative humidity from 10 % to 100 % with condensation.

Dimensional sketch of electric actuators **MODACT MONED, MOPED**

Type No. 52 030 – 52 035 *(version with terminal board)*

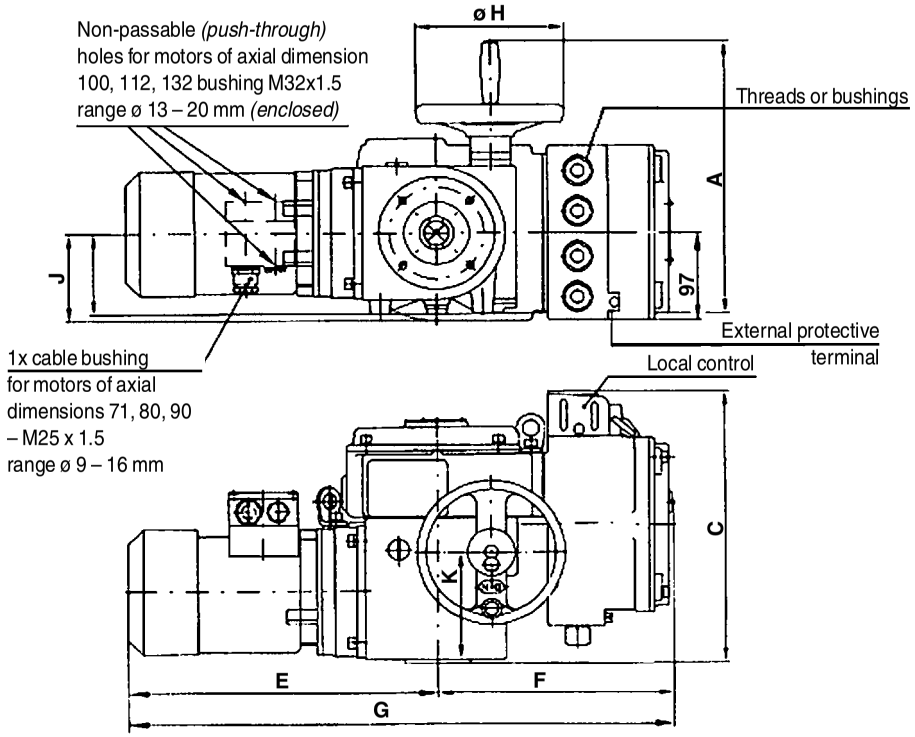

Type designation	A	B	C	D	E	F	G	ø H	J	K
52 030.xxxxNED	305	90	300	76	334	258	592	160	99	120
52 031.xxxxNED 52 032.xxxxNED	376	120	328	92	436	258	694	200	-	144
52 033.xxxxNED 52 034.xxxxNED	455	145	387	123	519	288	807	250	-	190
52 035.xxxxNED	540	178	445	153	598	298	328	926	-	234

Dimensional sketch of electric actuators **MODACT MONED, MOPED**

Type No. 52 036 *(version with terminal board)*

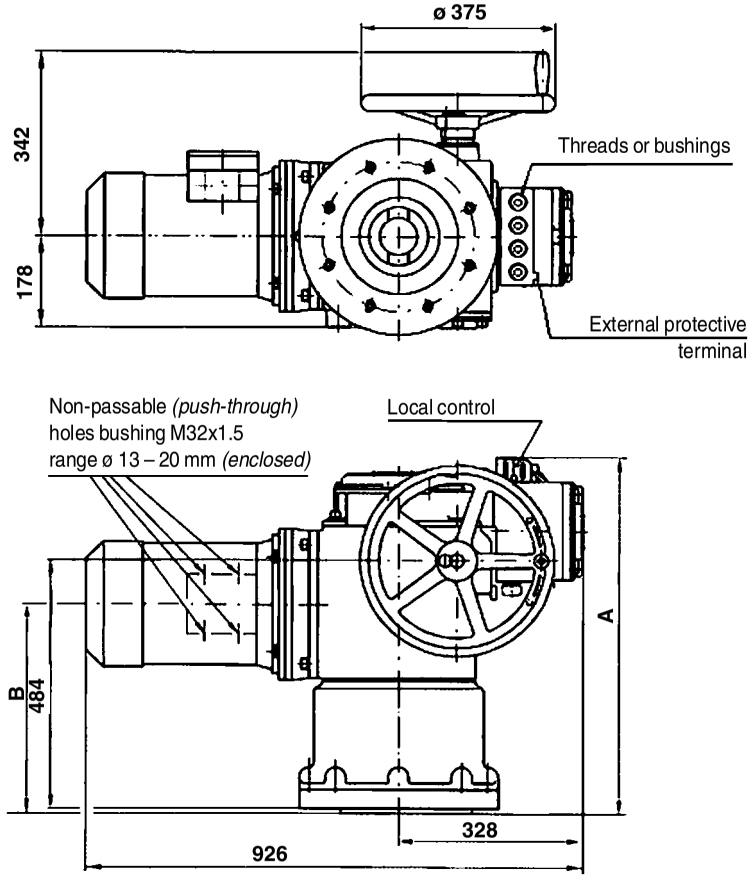

Type designation	A	B
52 036.xxxxNED shape A	785	463
52 036.xxxxNED shape B_1, C, D, E	740	418

Note: *For actuators MODACT MONED, MONEDJ, the switchboard box has threads for bushings: 3 x thread M20 x 1.5; 1 x thread M25 x 1.5 (the bushings are included in the delivery - wrapped-together part).*
For actuators MODACT MOPED, the switchboard box has bushings: 1 x M25 x 1.5, range of Ø 13 – 18 mm; 2 x M20 x 15 range of Ø 10 – 14 mm; 1 x M20 x 1.5 range of Ø 6 – 12 mm.
The electric motor (except for the actuator version with the motor interconnected with the switchboard box) is always delivered with cable bushing. Connector Harting is always fitted with cable bushings.

Dimensional sketch of electric actuators **MODACT MONED, MOPED**

Type No. 52 030.xxxxNED – 52 035 *(version with connector)*

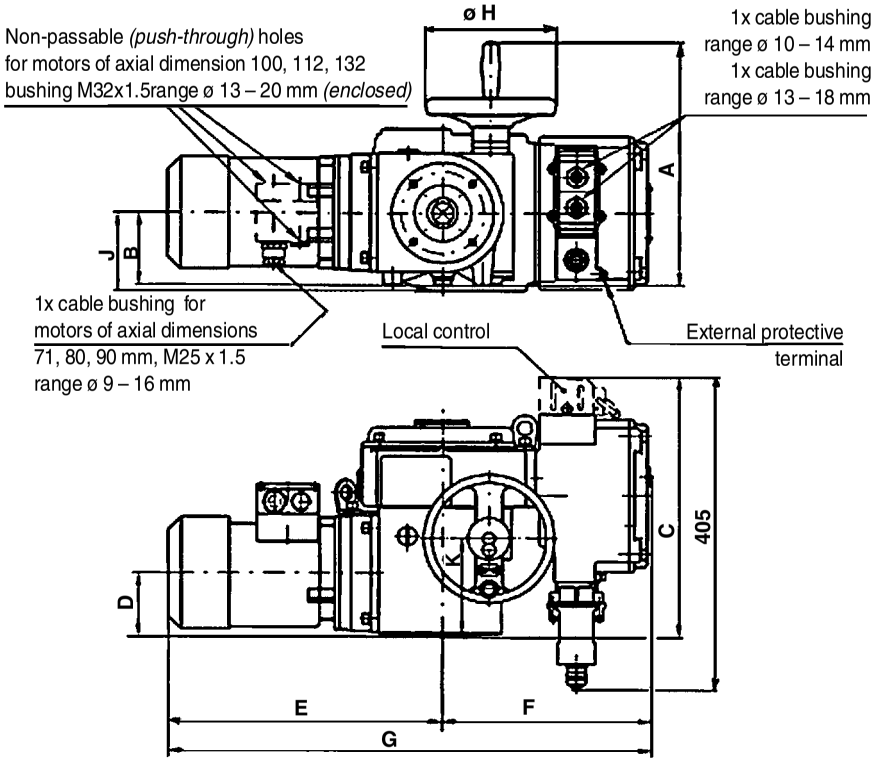

Type designation	A	B	C	D	E	F	G	ø H	J	K
52 030.xxxxNED	305	90	325	78	334	258	592	160	99	120
52 031.xxxxNED 52 032.xxxxNED	376	120	350	92	436	258	694	200	-	144
52 033.xxxxNED 52 034.xxxxNED	455	145	410	123	519	288	807	250	-	190
52 035.xxxxNED	540	178	470	153	598	328	926	375	-	234

Dimensional sketch of electric actuators **MODACT MONED, MOPED**

Type No. 52 036 *(version with connector)*

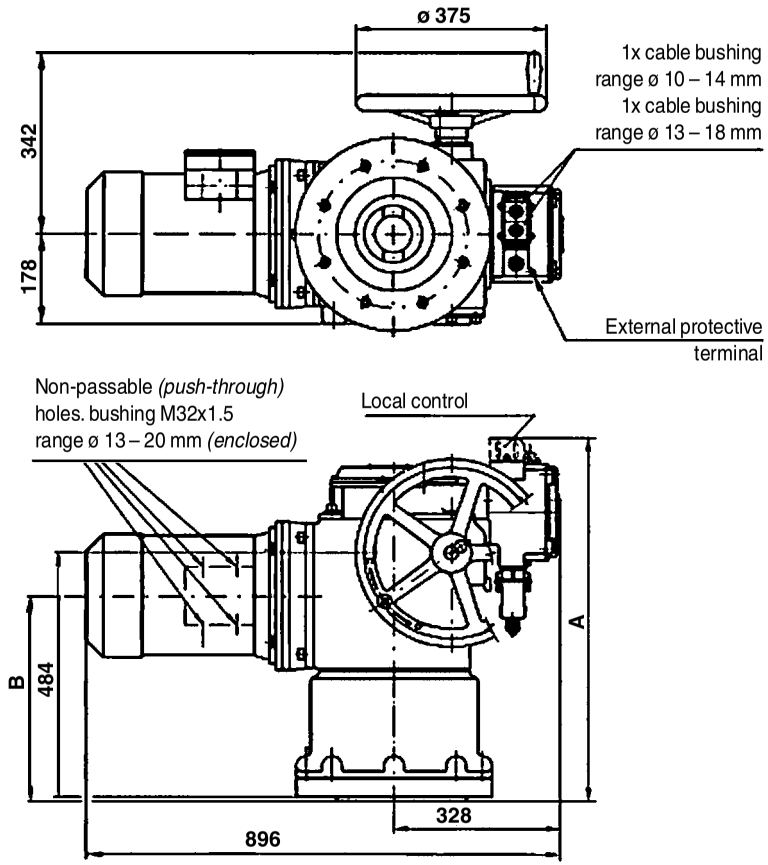

Type designation	A	B
52 036.xxxxNED shape A	785	463
52 036.xxxxNED shape B_1, C, D, E	740	418

Holes for additional fastening of actuators **MODACT MONED, MOPED,**
Type No. 52 030 – 52 035

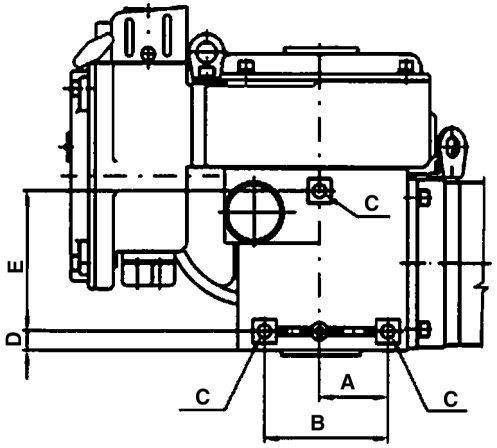

Type designation	Dimension *(mm)*				
	A	B	C	D	E
52 030.xxxxN	61	110	M10	16	120
52 031.xxxxN 52 032.xxxxN	90	160	M12	21	140
52 033.xxxxN 52 034.xxxxN	110	210	M16	23	200
52 035.xxxxN	120	240	M20	47	220

Note:
The holes for additional fastening of actuators MODACT serve only for catching the weight of the actuators and should not be exposed to any other additional force.

Modification for rising spindle

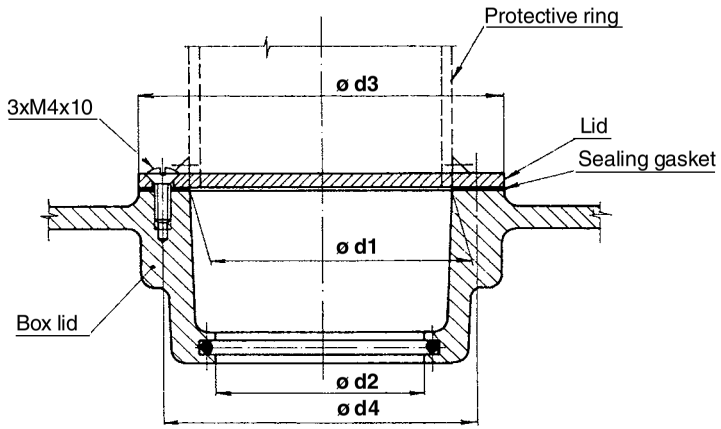

Dimensions *(mm)*	Type number				
	52 030	52 031 52 032	52 033 52 034	52 035	52 036
ø d_1	45	60	80	90	90
ø d_2	35,5	50,5	75	80,5	80,5
ø d_3	65	80	110	110	110
ø d_4	55	70	100	100	100

Protective adapter *(including lid hole)* – to be made by the customer.

Connecting dimensions of actuators
MODACT MONED, MONEDJ, MOPED, Type No. 52 030 – 52 036
– basic version *(without adapter)*

Shape C

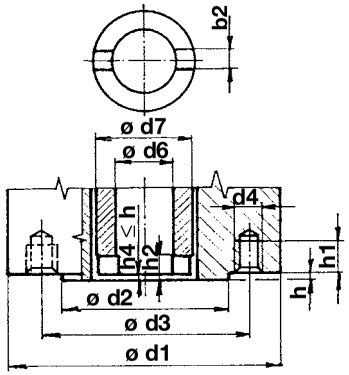

Shape D

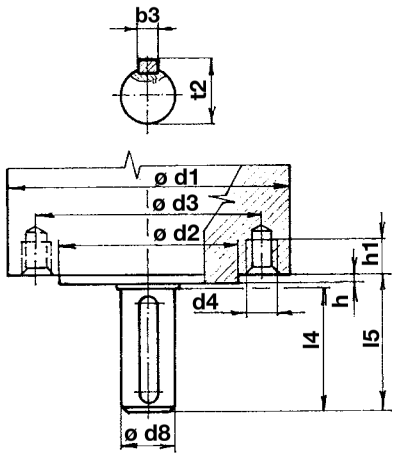

Shape E

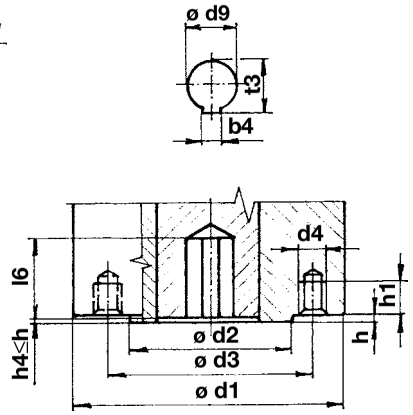

Table of basic connecting dimensions of actuators
MODACT MONED, MOPED *(without adapter)*

Shape	Dimension *(mm)*	Type number				
		52 030	**52 031 52 032**	**52 033 52 034**	**52 035**	**52 036**
C, D, E *(identical dimensions)*	ø d1 orientational value	125	175	210	300	390
	ø d2 f8	70	100	130	200	230
	ø d3	102	140	165	254	298
	d4	M 10	M 16	M 20	M 16	M 20
	number of threaded holes	4	4	4	8	8
	hmax	3	4	5	5	5
	h1 min. 1,25d4	12,5	20	25	20	25
C	ø d7	40	60	80	100	120
	h2	10	12	15	16	18
	b2 H11	14	20	24	30	40
	ø d6	30	41,5	53	72	72
D	ø d8 g6	20	30	40	50	60
	l_4	50	70	90	110	120
	t2max	22,5	33	43	53,5	64
	b3 h9	6	8	12	14	18
	l_5	55	76	97	117	127
E	ø d9 H8	20	30	40	50	60
	l_6 min.	55	76	97	117	127
	t3	22,8	33,3	43,3	53,8	64,4
	b4 Js9	6	8	12	14	18

The dimensions ø d6 and l_6 must not be lower than values in the table.
The dimensions are given in mm.

Adapters to actuators **MODACT MONED, MOPED,**
Type No. 52 030 – 52 035

Shape A

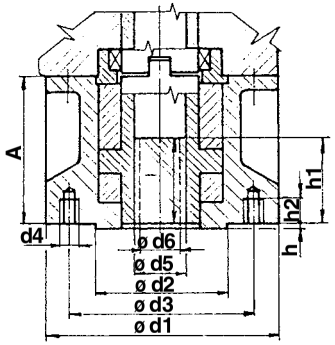

Shape B1

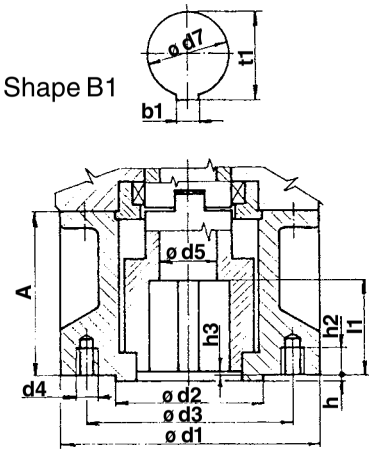

Assignment of adapters to actuators

Shape	Dimensions *(mm)*	Type number			
		52 030	52 031 52 032	52 033 52 034	52 035
A, B1 *(identical dimensions)*	ø d1	125	175	210	300
	ø d2 f8	70	100	130	200
	ø d3	102	140	165	254
	d4	M 10	M 16	M 20	M 16
	number of holes d4	4	4	4	8
	h	3	4	5	5
	h2 min.	12,5	20	25	20
A	A	63,5	110	179	155
	ø d5	30	38	53	63
	ø d6 max	28	36	44	60
	h1 max	43,5	65	92	110
	l min	45	55	70	90
B1	A	63,5	110	122	155
	ø d5	30	40	50	65
	l1 min	45	65	80	110
	h3 max	3	4	5	5
	b1	12	18	22	28
	ø d7 H9	42	60	80	100
	t1	45,3	64,4	85,4	106,4

Adapters to actuators **MODACT MONED, MOPED,**
Type No. 52 036

Shape A

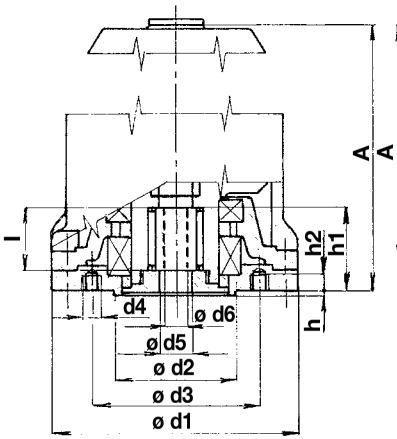

Shape B1

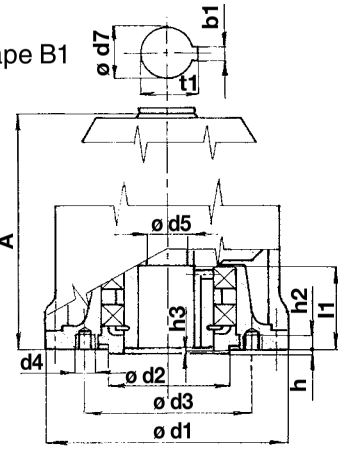

Shape	Dimensions *(mm)*	52 036
A, B1 *(identical dimensions)*	ø d1	390
	ø d2 f8	230
	ø d3	298
	d4	M 20
	number of holes d4	8
	h	5
	h2 min.	25
A	A	740 1+)
	ø d5	72
	ø d6 max	70
	h1 max	165
	l min	110
B1	A	695 2+)
	ø d5	72
	l1 min	130
	h3 max	5
	b1	32
	ø d7 H9	120
	t1	127,4

Notes:
1+) – The nut is built-in into the actuator
2+) – The case is built-in into the actuator

9. PACKING AND STORING

For inland freight, the actuators are unpacked. However, they should be transported by covered conveyances or in transport containers.

For delivery abroad, the actuators should be packed, the type and design of package being adapted to the transport conditions and the distance of the place of destination. Upon receipt of the actuator from the factory, it is essential to check that no damage was caused during transport and to compare the data on the actuator rating plates with those contained in the order and accompanying documentation. Any discrepancy, defect or damage should be immediately reported to the supplier.

When the unpacked actuator is not immediately installed it should be stored at a dust-free location with a temperature within the range of - 25 °C to + 50 °C and relative humidity up to 80% where there are neither aggressive gases nor vapours and which is secured against the harmful effects of climatic conditions. If the actuator is to be stored for a longer period than 3 years then, prior to commissioning, oil refilling should be made. Any manipulation of the equipment at a temperature below - 25 °C is forbidden. Storing the actuator out of doors or at a location that is not protected against the effects of rain, snow or ice accretion should be avoided. Before putting the actuator into operation, slush should be removed. When unpacked actuators are to be stored longer than 3 months it is advisable to place a bag with silica gel or another suitable dessicant in the terminal box.

10. CHECKING OF THE INSTRUMENT FUNCTION AND ITS LOCATION

Prior to installation, make sure that the actuator was not damaged during storing. A functional check of the electric-motor can be made so that it is connected to the AC mains via a circuit breaker and started for short-time operation. In this case, it is sufficient to make sure that the electric motor starts and turns the output shaft. The actuator should be installed so as to obtain easy access to the handwheel, the terminal box and the control box. It is also imperative to check that the installation complies with the Clause “Operating Conditions”. If another method of installation is required due to local conditions, please consult the manufacturer.

11. ATTACHMENT TO A FITTING

Place the actuator on the fitting so that the output shaft fits dependably in the coupling thereof. Attach the actuator to the fitting by 4 *(8)* screws and check the attachment by rotating the handwheel. Remove the terminal box cover and wire the actuator, according to the internal and external circuit layouts.

For handling the actuator during assembly with the fitting, make use of the three suspension lugs with which the actuator is provided. In no case, these lugs can be used for suspension of the actuator with the fitting.

The actuator must be properly protected against both overloading and short-circuiting.

12. ADJUSTMENT OF THE ACTUATOR WITH A VALVE

After fitting the actuator on the valve and checking mechanical connection, the assembly is set up and adjusted.

Setting-up and adjustment can only be carried out by a person with prescribed qualification. These works may not be carried out without properly studying these assembly instructions. Adjustment is accomplished according to instructions for the given type of electronics *(DMS2, DMS2 ED)* and outfit *(manual, program).*

13. OPERATION AND MAINTENANCE

Depending on the operating conditions, the operation of rotary actuators usually involves only the transmission of pulses, as required for the individual functions. In the event of a power supply failure, readjust the controlled device by the handwheel. If the actuator has been connected in the circuit of automatic equipment *(which does not imply the control mode)* it is advisable that manual remote control units are connected in the circuit so that the actuator can be controlled even if a failure of the automatic equipment occurs.

It is the operator’s duty to ensure that the actuator is given the prescribed maintenance attention and is protected against the harmful effects of ambient and climatic conditions not included in the Clause “Operating conditions”.

Within half a year at the latest from putting the actuator into operation and then at least once a year, it is necessary to properly tighten the bolts connecting the valve with the actuator. The bolts are to be tightened in a cross-wise manner.

Lubrication

The actuators are lubricated with plastic consistent lubricants or gearbox oil PP 80.

Lubricants

Type number of actuator	Adjusting speed of output shaft [min^{-1}]	Surrounding temperature [°C]		
		-25 +70	-40 +60	-25 +60
52 030, 52 031, 52 032	up to 40	M	M	M
52 033, 52 034	above 40	O	O	O
52 035	applies to all speeds	O	O	O
52 036	applies to all speeds	O	O	O

Note: *M – plastic lubricant;*
O – gearbox oil

Actuators with plastic lubricant

The types of lubricant and amounts are listed in the Table 1 or 2.

Lubricants in the drive units supplied are designed to last the entire useful life of the unit.

During the time when the drive units are in use, it is not necessary to change or monitor the amount of the lubricant.

The actuators with plastic lubricant are labelled *"Filled: solid grease"* on the power box at the side of the hand-wheel.

Type number of drive unit	Amount of lubricant (kg)	Type of lubricant for specific climatic conditions and temperature		
		T1 (-25 – +70 °C)	U1 (-40 – +55 °C)	CHL1 (-60 – +40 °C)
52 030	0.30	CIATIM – 201 GOST 6267-74 CIATIM – 221 GOST 9433-80		CIATIM – 221 GOST 9433-80
52 031, 52 032	0.50			
52 033, 52 034	0.70			
52 035, 52 036	0.90			

Note: *The Ciatim 221 lubricant is designed for the friction points of rubber bushings against metal surfaces, roller brake, the hub of an outer cogged wheel of a planetary-gear differential (for locations of friction between the shaft and other surfaces).*

Actuators with oil charge

Check the level of oil at least yearly and refill, if required. Oil change should be made after 500 operating hoursof the actuator, but not later than after 2 years of operation. The level of oil should be as high as the filling hole. For the actuator, Grade PP 80 motor-car gearbox oil or an equivalent oil with the same properties *(viscosity class 80 W, according to SAE/J306a)* should be used.

The quantity of oil required is tabulated below:

Type No.	Quantity of oil (in l)
52 030	1,3
52 031, 52 032	2,8
52 033, 52 034	6
52 035	12
52 036	12 + grease *)

*) The adapter of the actuator, No. 52 036, should be packed with 3 kg of PM MOGUL LV 2-3 grease.

Maintenance

In case the actuator is operated in a dusty environment its surface should be regularly cleaned from dust in order to prevent deterioration of its cooling.

Once in two years, it is recommended to lightly smear the driving wheel gearing on the output shaft and the gear wheel of the position sensor in the control box. Use the lubricant CIATIM 201 or PM MOGUL LU 2-3.

14. FAILURES AND THEIR REMOVAL

Actuator in end position does not start, with motor buzzing

Make sure that no phase has been discontinued. If a slide valve has jammed and cannot be released even by the handwheel the actuator should be dismantled and the jamming should be mechanically removed.

Caution!

The actuator, Type No. 52 036, has been engineered on the basis of a modified design variant of the actuator, Type No. 52 035, which has been fitted with an adapter at its output. This adapter is a single-speed gearbox with spur gears. The output shaft of the adapter also serves as the output shaft of the actuator, Type No. 52 036. The operation of the control part is tied to the output shaft of the driving actuator, Type No. 52 035.

When the hollow shaft in the control box rotates anticlockwise the fitting closes *(with the output shaftof the actuator, Type No. 52 036, rotating clockwise)* provided that the spindle of the fitting is fitted with left-hand threads. The direction of rotation of the handwheel is the same for all types of actuators.

LIST OF SPARE PARTS OF MODACT MONED, MOPED, MONEDJ ACTUATORS

(for 5 years of operation)

Type No.	Designation	Drawing or Standard No.	Pcs.	Application
52 030	Sealing ring 125x3 2327311049	PN 029281.2	1	Packing between the power gear box and the flange with gears
	Sealing ring 180x3 2327311043	PN 029281.2	1	Gasket of terminal box cover
	Sealing ring 130x3 2327311041	PN 029281.2	1	Packing between the control box and the power gear box
	Sealing ring 43x35 2327311008	PN 029280.2	1	Sealing of output shaft in the control box
	Sealing ring 10x6 2327311001	PN 029280.2	2	Sealing of torque - tripping shaft
	Sealing ring 170x3 2327311054	PN 029281.2	1	Sealing of control box cover
	Rubber-copper 40x52x7 2327352066	ČSN 029401.0	1	Sealing of output shaft in the control box
	Sealing ring 32x2 2327311037	PN 029281.2	1	Sealing of glas of local position indicator
	Gasket 405052737414	224612280	1	Hole cover gasket for the rising spindle of the fitting
	Rubber-copper 40x52x7 2327352066	ČSN 029401.0	2	Sealing of output shaft in the power gear box
	Rubber-copper 16x28x7 2327352022	ČSN 029401.0	1	Sealing of handwheel shaft
	Gasket 16x22 405052105014	224580840	2	Gasket of threaded oil filling plug
	Sealing ring 125x5 2327311404	PN 029281.2	1	Packing between the control box and the terminal box
	Gasket	224591870	1	Packing between the electric motor and the flange with gears
52 031 + 52 032	Rubber-copper 60x75x8 2327352090	ČSN 029401.0	2	Sealing of output shaft of the power gear box
	Rubber-copper 20x32x7 2327352027	ČSN 029401.0	1	Sealing of handwheel shaft
	Sealing ring 95x85 2327311029	PN 029280.2	1	Packing piece with “rubber-copper” rings in the power gear box
	Sealing ring 50x2 2327311028	PN 029281.2	1	Packing of the torque spring cover
	Sealing ring 16x22	224580840	2	Sealing of threaded oil filling plug
	Packing *(according to motor)*	224642240 - 1LA708,709 224623470 - 1LA70	1	Packing between the electric motor and the flange with gears
	Sealing ring 125x5 2327311404	PN 029281.2	1	Packing between the control box and the terminal box

	Sealing ring 160x3 2327311048	PN 029281.2	1	Packing between the power gear box and the flange with gears
	Sealing ring 180x3 2327311043	PN 029281.2	1	Gasket of terminal box cover
	Sealing ring 190x3 2327311056	PN 029281.2	1	Packing between the control box and the power gear box
	Rubber-copper 55x70x8 2327352083	ČSN 029401.0	1	Sealing of output shaft in the power gear box
	Sealing ring 10x6 2327311001	PN 029280.2	2	Sealing of torque-tripping shaft
	Sealing ring 190x3 2327311056	PN 029281.2	1	Packing of control box cover
	Sealing ring 32x2 2327311037	PN 029281.2	1	Sealing of glass of local position indicator
	Gasket, Size 3 405052785014	224610741	1	Hole cover gasket for the rising spindle of fitting
	Sealing ring 60x50 2327311090	PN 029280.2	1	Sealing of output shaft in the control box cover
52 033 + 52 034	Sealing ring 200x3 2327311044	PN 029281.2	1	Packing between the power gear box and the flange with gears
	Sealing ring 180x3 2327311043	PN 029281.2	1	Sealing of terminal box cover
	Sealing ring 200x3 2327311044	PN 029281.2	1	Packing between the control box and the power gear box
	Rubber-copper 80x100x13 2327352097	ČSN 029401.0	1	Sealing of output shaft in the control box
	Sealing ring 10x6 2327311001	PN 029280.2	2	Sealing of torque-tripping shaft
	Sealing ring 200x3 2327311044	PN 029281.2	1	Sealing of control box cover
	Sealing ring 75x65 2327310991	PN 029280.2	1	Sealing of output shaft in the control box cover
	Sealing ring 32x2 2327311037	PN 029281.2	1	Sealing of glass of local position indicator
	Gasket, Size 4 405052713614	224611130	1	Hole cover gasket for the rising spindle of fitting
	Rubber-copper 80x100x10 2327352096	ČSN 029401.0	2	Sealing of output shaft in the power gear box
	Rubber-copper 27x40x10 2327352044	ČSN 029401.0	1	Sealing of handwheel shaft
	Sealing ring 70x2 2327311058	PN 029281.2	2	Sealing of torque spring cover
	Packing *(according to motor)*	224591530 - 1LA710,711 224642240 - 1LA709	1	Packing between the electric motor and the flange with gears
	Gasket 16x22 405052105074	224580840	2	Gasket of threaded oil filling plug
	Sealing ring 125x5 2327311404	PN 029281.2	1	Packing between the control box and the terminal box

52 035	Packing 405052104614	224593370	1	Packing between the electric motor and the flange with gears
	Sealing ring 280x3 2327311078	PN 029281.2	1	Packing between the flange with gears and the power gear box
	Sealing ring 180x3 2327311043	PN 029281.2	1	Gasket of terminal box cover
	Sealing ring 260x5 2327311046	PN 029281.2	1	Packing between the power gear box and the control box
	Rubber-copper 85x120x13 2327352098	ČSN 029401.0	1	Sealing of output shaft in the control box
	Sealing ring 10x6 2327311001	PN 029280.2	2	Sealing of torque-tripping shaft
	Sealing ring 200x3 2327311044	PN 029281.2	1	Packing of control box cover
	Sealing ring 90x80 232p7311011	PN 029280.2	1	Sealing of output shaft in the control box cover
	Sealing ring 32x2 2327311037	PN 029281.2	1	Sealing of glass of local position indicator
	Gasket 405052713614	224611130	1	Hole cover gasket for the rising spindle of fitting
	Rubber-copper 105x130x13 2327352109	ČSN 029401.0	2	Sealing of output shaft in the power gear box
	Rubber-copper 30x50x12 2327352054	ČSN 029401.0	1	Sealing of handwheel shaft
	Sealing ring 90x2 2327311081	PN 029281.2	1	Sealing of torque spring cover
	Gasket 16x22 405052105014	22458084.0	2	Gasket of threaded oil filling plug
52 036	For the actuators, Type No. 52 036, the same spare parts are supplied as for Type No. 52 035, but with the following added items:			
	Rubber-copper 150x180x15 2327352108	ČSN 029401.0	1	Sealing of output shaft in the gearbox
	Rubber-copper 95x125x13 2327352107	ČSN 029401.0	1	Lower seal of sun gear
	Rubber-copper 105x130x13 2327352109	ČSN 029401.0	1	Upper seal of sun gear
	Gasket 405052747714	224612480	1	Upper seal of sun gear
	Gasket 405052743914	224612590	1	Packing between the flange with bearing and differential gearing unit
	Gasket 405052743514	224612580	1	Packing between the flange and the flange with bearing

Actuators fitted with electronics DMS2 ED			
Part name	**Part designation**	**Stock item**	**Note**
Source board	DMS2.ED.Z	39620000	
Position sensor multi-revolution	DMS2.ED.S	39620001	
Torque sensor	DMS2.TORK	39620003	common for DMS2.ED and DMS2
Analog module	DMS.ED.CPT	39620004	back signal 4 – 20 mA and software blocked regulator
Display	DMS2.ED.D	39620005	
Actuators fitted with electronics DMS2			
Source board analog	DMS2.ZAN	39620014	only for analog
Source board Profibus	DMS2.ZPR	39620015	only for Profibus version
Position sensor multi-revolution	DMS2.S	39620016	
Torque sensor	DMS2.TORK	39620003	common for DMS2.ED and DMS2
Display	DMS2.DP	39620018	
Board of local control block	DMS2.H1	39620019	
Dynamic brakes for actuators with electronics DMS2 ED a DMS2			
Brake	BR2 550	2339610124	
Brake	BR2 BK 550	2339610128	
Brake	BR 2,2	2339610142	
Brake	BR BK 2,2	2339610141	
Braking resistance	TR342 68R	2337110355	

A setting program is available for the actuators (it is described in these Assembly Instructions); it enables the parameters of the electronic outfit of the actuators to be set and checked by a computer.

The electronics is connected to the serial port of the computer by a cable (it is available e.g. under the name "Extending cable for mouse 9F-9M").

In case the computer is not fitted with a serial port the converter USB-RS 232, can be ordered.

ZPA PEČKY, a.s.

Development, production and services of electric actuators and switchboards.
Top-quality sheet-metal processing (TRUMPF equipment), powder paint shop.

SURVEY OF PRODUCED ACTUATORS

KP MINI, KP MIDI
Electric rotary (90°) actuators (up to 30 Nm)

MODACT MOK, MOKED, MOKP Ex, MOKPED Ex
Electric rotary (90°) actuators for ball valves and flaps

MODACT MOKA
Electric rotary (90°) actuators for nuclear power stations
application outside containment

MODACT MON, MOP, MONJ, MONED, MOPED, MONEDJ
Electric rotary multi-turn actuators

MODACT MO EEx, MOED EEx
Explosion proof electric multi-turn actuators

MODACT MOA
Electric multi-turn actuators for nuclear power stations
application outside containment

MODACT MOA OC
Electric multi-turn actuators for nuclear power stations
application inside containment

MODACT MPR Variant
Electric rotary (160°) lever actuators with a variable output speed

MODACT MPS Konstant, MPSED
Electric rotary (160°) lever actuators with a constant output speed

MODACT MTN, MTP, MTNED, MTPED
Electric linear thrust actuators with a constant output speed

Deliveries of assembled actuator + valve (or MASTERGEAR gearbox) combinations

TRADITION • QUALITY • RELIABILITY

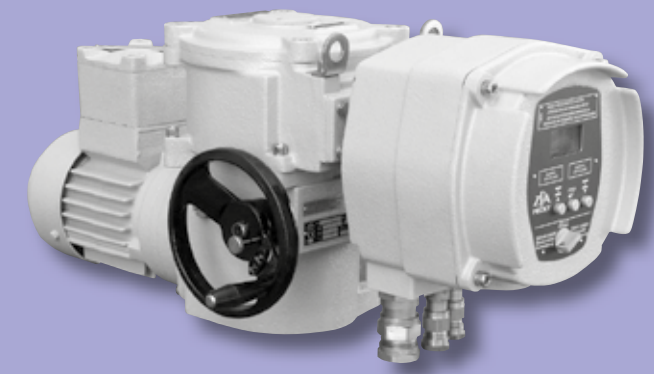
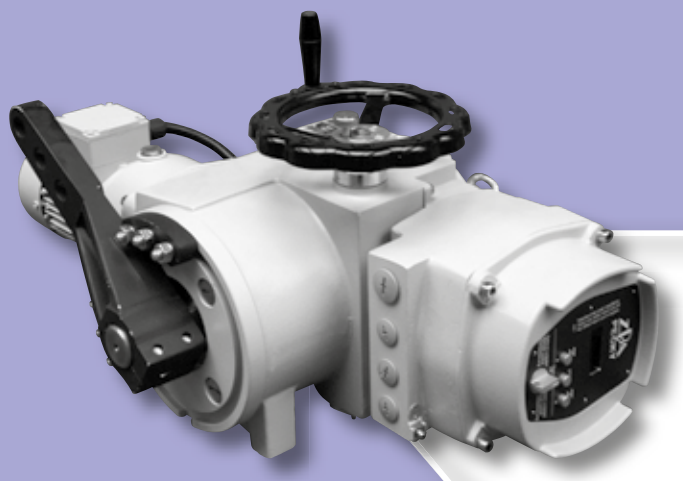
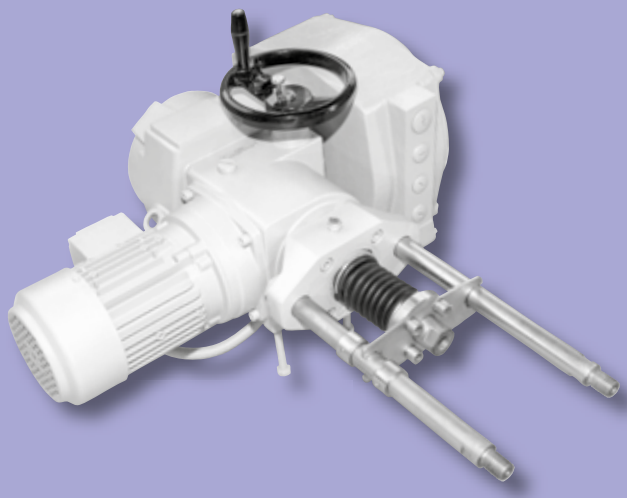
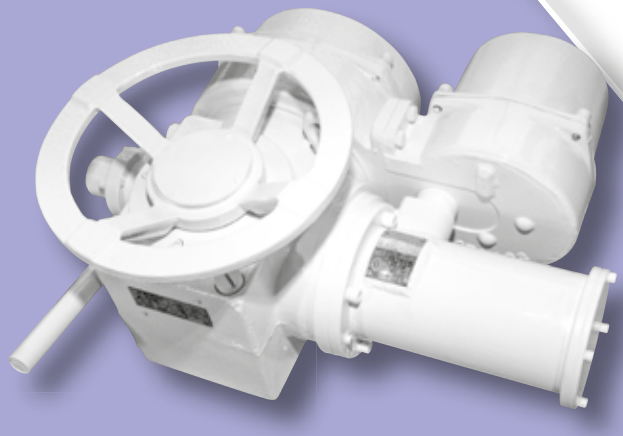
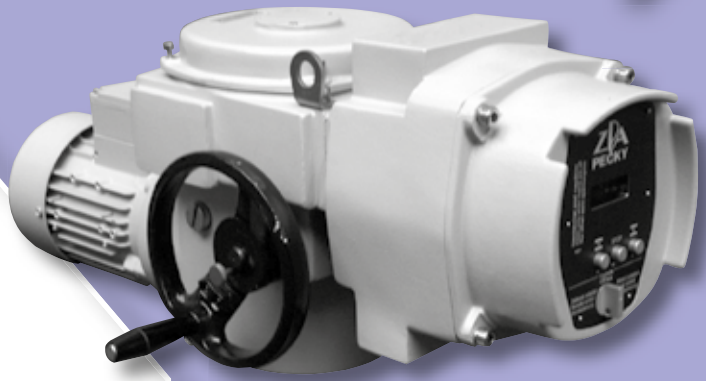

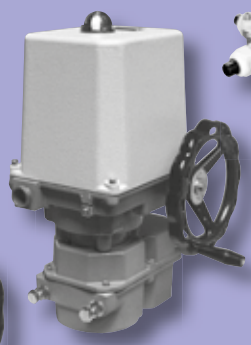
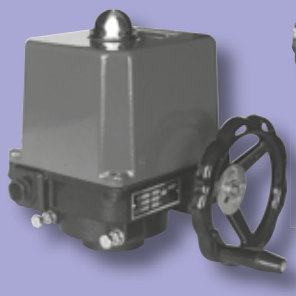

ZPA Pečky, a.s.
tř. 5. května 166
289 11 PEČKY, Czech Republic
www.zpa-pecky.cz

tel.: +420 321 785 141-9
fax: +420 321 785 165
+420 321 785 167
e-mail: zpa@zpa-pecky.cz